STATE LIBRARY OF PENNSYLVANIA
3 0144 00080030 0

Digitized by the Internet Archive
in 2016

https://archive.org/details/unitcoursejunior00penn

Unit Course

JUNIOR REPAIRMAN TRAINEE — RADIO

For Use in Training of Civilian Personnel of the
United States Army Signal Corps

UNITED STATES ARMY SIGNAL CORPS
and
UNITED STATES OFFICE OF EDUCATION
Vocational Training for War Production Workers
1943

P 38.19
1.3.1
F #342

Unit Course

JUNIOR REPAIRMAN TRAINEE — RADIO

For Use in Training of Civilian Personnel of the United States Army Signal Corps

Prepared with the Approval of

THE UNITED STATES ARMY SIGNAL CORPS

by

PENNSYLVANIA DEPARTMENT OF PUBLIC INSTRUCTION
Division of Industrial Education

in Cooperation with

UNITED STATES OFFICE OF EDUCATION
Vocational Training for War Production Workers

DEPARTMENT OF PUBLIC INSTRUCTION
COMMONWEALTH OF PENNSYLVANIA
HARRISBURG
1943

Foreword

These job sheets have been prepared for use by training centers giving courses in Junior Repairman Trainee — Radio to civilian employees of the Signal Corps. This instruction material will provide directions for work in the shop and will cover one-half of the time spent in this training program.

The purpose of the shop training for Junior Repairman Trainee—Radio is to develop the skills necessary to maintain and repair standard radio communication equipment. These skills should include the use of standard radio analyzing and testing instruments in locating and repairing faults in radio communication equipment. Training experiences and related information are planned for specific application to the requirements of the Signal Corps. Related instruction should be given in the theory of radio circuits to the extent that the trainee will be able to maintain the equipment in the proper operating conditions and to locate and repair faults which may develop. The related work given in the classroom and the shop work should be carefully correlated. The trainee who successfully completes this course should have skills which make him of immediate use to the Signal Corps as a Radio Repairman, or he should be qualified to pursue a more highly specialized type of training. The difficulties encountered in obtaining equipment and supplies may make it necessary to deviate from the prescribed details in some of the jobs. Where compromises are necessary, care should be taken that the purpose of the job is accomplished.

These job sheets and reference sheets represent a revision of the original course of study for Junior Repairman Trainee — Radio. The revision was made at a conference under the direction of J. C. Swanson, Senior Educationist, U. S. Office of Education and attended by: H. B. Behrendt, San Antonio, Texas; J. C. Bullock, State College, Mississippi; W. B. Connoley, Charleston, West Virginia; F. Kulicke, Chicago, Illinois; T. L. Hankins, Lexington, Kentucky; M. Homelsky, Philadelphia, Pennsylvania; F. L. Horman, New York, New York; D. F. Keller, Winston Salem, North Carolina; C. D. Kelley, Charleston, West Virginia; A. C. Sorrell, Washington, D. C. This material has been approved by the U. S. Army Signal Corps.

Wm. D. Hamlin
Colonel, Signal Corps,
Executive

L. S. Hawkins
Director,
Vocational Training for
War Production Workers
U. S. Office of Education

Acknowledgment

Appreciation is extended to the several agencies which assisted in the preparation and criticism of this publication. The cooperation of the United States Army Signal Corps; the Instructional Materials Section, Vocational Training for War Production Workers, United States Office of Education; and the School District of Philadelphia is acknowledged. W. P. Loomis, Supervisor, Instructional Materials Section, and J. Chester Swanson, Liaison Agent for Signal Corps Training, both of the United States Office of Education, coordinated the efforts of the participating agencies and assisted in planning and reviewing instructional materials.

Special acknowledgment is extended to Charles F. Bauder, Director of Vocational Education, and to William E. Brunton, Assistant Director in charge of War Production Training, of the School District of Philadelphia, for cooperation and assistance in this work.

Material assistance in the preparation of this manual was provided by Byron Blank, James Carver, Lawrence Carver, George Isphording, Theodore Jones, Lawrence Oberst, David Rotenberg, and Paul Shallcross, all of whom were associated with the Philadelphia Curriculum Laboratory.

This unit was prepared at the Philadelphia Field Curriculum Laboratory of the Pennsylvania Department of Public Instruction. Wayne W. Thompson, Adviser, Division of Industrial Education, supervised the preparation of materials at the laboratory. This work was completed under the direction of Charles F. Zinn, Adviser, Division of Industrial Education, and under the general supervision of Paul L. Cressman, State Director of Vocational Training for War Production Workers.

Francis B. Haas
Superintendent of Public Instruction

April, 1943

Instructor's Information

This book provides advanced training in the radio field and is based upon completion of the basic work provided in the Mechanic Learner — Radio manual. That book should be used as a reference for the fundamental units of construction.

There is available from the U. S. Office of Education, Instructional Materials Section, the following data useful for application in this Junior Repairman Trainee course:

(1) Course outline of theory instruction to accompany these shop experiences.

(2) Approved list of equipment and tools.

Certain additions should be made to the basic list of equipment approved for purchase, by shop construction of other units for permanent shop equipment. The following suggestions should be carefully observed for efficient application of this manual.

Power Supplies:

For this course, unless otherwise noted, a simple power supply similar to the type constructed in Job 14 of the Mechanic Learner course is the basic unit; several should be assembled for use in the various jobs. Adaptations can be made where necessary.

Job 1 calls for such a power supply with switches, load resistors, and provisions for connecting meters to the circuit as indicated in the schematic diagram, Fig. 13, Job. 1. Two or three of these units, so adapted, may be kept on hand for this job.

For Job 4, a power supply for bias voltages is required. Reference K explains how to convert the simple power supply for this purpose; once made, several of these may be kept on hand for application as required.

A triple-power-supply is required for the transmitter and will probably be kept assembled in the rack of that equipment. See References Q and T.

Heterodyne Frequency Meter:

The approved equipment list provides for a radio frequency signal generator which may be utilized as a section of the complete heterodyne frequency meter necessary for Jobs 2, 3, 4, 8, and 9. Construction details for a complete heterodyne frequency meter can be secured from the ARRL Amateur's Handbook or the Radio Handbook.

The absorption type frequency meter, also used in the same jobs, is on the approved list, but if additional ones are required, can likewise be assembled according to data in the same Handbooks.

The Dummy Antenna:

This is required in Jobs 2, 3, 4, 7, 8, and 9. It can either be adapted from the antenna coupler as shown in Fig. 16D, Reference R, or it can be entirely constructed without involving the use of a complete antenna coupler unit, by following data provided in the above mentioned Handbooks.

A 10-watt or 15-watt incandescent lamp is used as the dummy load with either type.

The Antenna Coupler:

An antenna coupler is used as such in Jobs 8 and 9. Construction details are given in Reference R. However, in Job 2 the antenna coupler may be adapted for use as a Dummy Antenna.

Transmitter:

It is not intended that each trainee make and assemble a complete transmitter. He will make and test certain component parts in Jobs 2, 3, 4, and 5. These should be disassembled and returned to stock after completion of the unit.

However, since each trainee must perform testing and adjustment of a completed transmitter, at least one transmitter should be assembled and kept available for Jobs 7, 8, and 9. If sufficient materials are on hand several may be made.

In the beginning of the course the best of the construction units should be put aside for the complete assembly. Some of the essential parts are not made as jobs, but information for their construction, and assembly of the complete transmitter, is provided as reference material in Unit 7.

Transmission Lines:

May be Lecher wire lines, coaxial cables, or twisted pair cables. One of each should be available for use with each complete transmitter. Data for their construction is found in the ARRL and Radio Handbooks.

Receiver:

At least three receivers should be available for this course. The superheterodyne receiver constructed in Job 11, a commercial t-r-f receiver, and an all-wave receiver are required for use in Jobs 12 and 13. The commercial receiver should be provided with specification details, the sensitivity requirements of the instrument to be used, and the manufacturer's alignment procedure.

Chassis and Panels:

Chassis and panels can be re-issued once a sufficient amount has been fabricated.

Plug-in Coils:

Once wound in sufficient quantities, these also can be kept in stock rather than constantly being re-wound. To save material and time it will be advisable to plan such a stock supply.

Routing of Jobs:

Wise planning of assignment is necessary to obtain efficient use of personnel and equipment.

The following chart shows the relationship of the jobs. Those marked X can be done independently, and those with numbers require the jobs so numbered as prerequisites for their assignment.

Jobs:	1	2	3	4	5	6	7	8	9	10	11	12	13	14	15	16
	X	X	2	2	X	5	2	2	2	X	X	11	11	11	11	11
				or			3	3	3				12		12	12
				3			4	4	4						13	13
							5	5	5							14
							6	6	6							15
								7	7							
									8							

Use of Reference Material and Study Assignments:

The reading of related information, whether in the manual, theory outline, or reference material, should take place outside the shop, either at home or in the theory classroom, prior to the actual performance of the job. This involves careful assignment following consideration of routing procedure.

Substitution of Parts:

The instructor should thoroughly study the requirements of each job for possible substitution where specified parts are not available. This is acceptable if changes in values are made according to good design practice.

Duplication of Schematic Diagrams:

It might prove of assistance to blueprint or otherwise duplicate drawings which are more frequently used.

Use of Question Sheet and Forms:

The completed forms and the answers to the questions should be carefully checked by the instructor, and progress records kept available for the trainees.

Table of Contents

PAGE

UNIT 1 — THE CHARACTERISTICS OF A FULL WAVE POWER SUPPLY 1

Reference A — Use of the Cathode Ray Oscillograph in Determining Wave Form of A-C Voltages 2

Exercise A — Determine the Wave Form of A-C Line Voltages 5

Exercise B — Determine the Wave Form of Oscillator Voltages 7

Reference B — The Characteristics of a Full Wave Power Supply 9

JOB SHEET 1 — Test a Full Wave Power Supply for Rectification, Filtering, and Voltage Regulation 14

UNIT 2 — THE ELECTRON-COUPLED OSCILLATOR 19

Reference C — The Electron-Coupled Oscillator 20

Reference D — R-F Voltage Indicators 24

Reference E — R-F Current Indicators 29

Reference F — R-F Power Indicators 30

Reference G — The Dummy Antenna 31

Reference H — The Heterodyne Frequency Meter 34

JOB SHEET 2 — Construct an Electron-Coupled Oscillator 37

Part I — Construct an Electron-Coupled Oscillator with Untuned Output . . 39

Part II — Convert ECO Having Untuned Output Circuit to One with a Tuned Output Circuit to Provide Frequency Doubling 42

UNIT 3 — THE CRYSTAL-CONTROLLED OSCILLATOR 47

Reference I — The Crystal-Controlled Oscillator 48

JOB SHEET 3 — Construct a Crystal-Controlled Oscillator 52

UNIT 4 — THE R-F POWER AMPLIFIER 61

Reference J — The R-F Power Amplifier 62

Reference K — How to Convert a Simple Power Supply to One Which Will Provide Bias Voltages 70

JOB SHEET 4 — Construct an R-F Power Amplifier 71

Part I — Construct an R-F Power Amplifier to Act as a Frequency Doubler 71

Part II — Construct an R-F Power Amplifier to Act as a Class C Final Amplifier 76

UNIT 5 — THE SPEECH AMPLIFIER AND MODULATOR 81

Reference L — The Audio Frequency Amplifier 82

Reference M — The Speech Amplifier and Modulator 86

JOB SHEET 5 — Construct an Audio Amplifier 90

UNIT 6 — THE AUDIO FREQUENCY OSCILLATOR 97

Reference N — The Audio Frequency Oscillator 98

JOB SHEET 6 — The Use of the Audio Frequency Oscillator 100

A. Test a Loudspeaker 100

B. Test an Audio Amplifier for Frequency Distortion 103

Reference O — Methods of Testing an Audio Amplifier for Non-Linear and Phase Distortion 107

C. Test an Audio Amplifier for Distortion by Signal Injection 110

D. Test an Audio Amplifier for Distortion by Signal Tracing 114

UNIT 7 — THE USE OF THE CATHODE RAY OSCILLOGRAPH FOR TRANSMITTER MEASUREMENTS 119
Reference P — Principles of Modulation 120
Reference Q — How to Construct a Triple Section Power Supply 127
Reference R — How to Construct an Antenna Coupler 129
Reference S — Conversion of the Audio Amplifier to a Modulator Unit 131
Reference T — The Assembly of the Units of a Transmitter 133
Reference U — Checking the Modulation of a Transmitter 136
Job Sheet 7 — Check the Transmitter for Modulation, Carrier Hum, and Distortion 139
A. Check and Adjust Transmitter for Modulation 139
B. Check Transmitter for Carrier Hum 142
C. Check Transmitter for Distortion 145
UNIT 8 — THE ADJUSTMENT AND USE OF TRANSMITTERS AND ASSOCIATED EQUIPMENT 149
Reference V — Theory of Transmitter Operation 150
Reference W — Theory of Adjustment of Equipment Associated with a Transmitter 153
Job Sheet 8 — Adjust a Transmitter and Associated Equipment 164
UNIT 9 — TRANSMITTER TROUBLE SHOOTING 173
Reference X — Methods Employed in Transmitter Trouble Shooting 174
Job Sheet 9 — Transmitter Trouble Shooting 178
I. Correction of Tube Faults 179
II. Correction of Resistance Values 179
III. Voltage Analysis 185
IV. Correction of R-F Signal Voltage Conditions 186
V. Correction of Modulation Troubles 188
UNIT 10 — THE CALIBRATION AND USE OF A VACUUM TUBE VOLTMETER 193
Reference Y — The Vacuum Tube Voltmeter 194
Job Sheet 10 — The Calibration and Use of a Vacuum Tube Voltmeter 198
A. Calibrate a Vacuum Tube Voltmeter 198
B. Measure Voltages with a V.T.V.M. 200
C. Calculate Gain-Per-Stage in an Audio Amplifier 201
D. Test an I-F Transformer for Operating Conditions 203
E. Test an Audio Transformer for the Ratio of the Primary to Secondary Turns 205
F. Test the Impedance of an Output Transformer 206
G. Measure Oscillator Grid Voltage 208
Reference Z — Additional Uses of the Vacuum Tube Voltmeter 210
UNIT 11 — THE SUPERHETERODYNE RECEIVER 213
Job Sheet 11 — Construct a Superheterodyne Receiver 214
UNIT 12 — THE R-F OSCILLATOR 223
Reference AA — The R-F Oscillator 224
Reference BB — Trimmer and Padder Capacitors 227
Reference CC — The Output Meter 228
Job Sheet 12 — Use the R-F Oscillator for Receiver Alignment 230
I. Align a T-R-F Receiver 231
II. Align a Superheterodyne Receiver 232
A. Align I-F Amplifier Trimmers 232
B. Align R-F, Mixer, and Oscillator Trimmers 234
C. Align an All-Wave Receiver 236

PAGE

UNIT 13 — USE OF THE OSCILLOGRAPH FOR RECEIVER ALIGNMENT AND ANALYSIS . . . 239

Reference DD — The Alignment of a Receiver with the Oscillograph and Frequency Modulated Oscillator . . . 240

JOB SHEET 13 — PART I — Align a Superheterodyne Receiver With a Frequency Modulated Oscillator and an Oscillograph . . . 243

A. Align for Maximum Selectivity . . . 244

B. Align for a "Flat Top" Curve . . . 248

Reference EE — Causes and Remedies of Receiver Hum . . . 249

JOB SHEET 13 — PART II — Analyze a Receiver for Hum and Distortion . . . 251

A. Determine the effects of Hum Voltage in a Receiver on the Wave pattern of the CRO . . . 252

B. Analyze a Receiver for Hum . . . 254

Reference FF — Causes and Remedies of Receiver Distortion . . . 256

C. Analyze a Receiver for Distortion . . . 258

UNIT 14 — CIRCUIT ANALYSIS BY VOLTAGE, RESISTANCE, AND CURRENT MEASUREMENTS . . . 265

Reference GG — Theory of Circuit Analysis . . . 266

JOB SHEET 14 — Make a Voltage, Resistance, and Current Analysis of the Circuits of a Superheterodyne Receiver . . . 272

A. Voltage Analysis . . . 273

B. Resistance Analysis . . . 277

C. Current Analysis . . . 281

UNIT 15 — THE USE OF SIGNAL TRACING EQUIPMENT . . . 285

Reference HH — Signal Tracing Equipment . . . 286

JOB SHEET 15 — Test a Radio With Signal Tracing Equipment . . . 289

A. Test Tubes . . . 291

B. Test Power Consumption . . . 292

C. Trace the Signal and Measure Gain-per-Stage in a Superheterodyne Receiver . . . 293

D. Check R-F By-Pass Capacitors . . . 296

E. Check and Trace the Signal in the A-F Portion of a Radio . . . 298

F. Check the Effectiveness of the Audio By-Pass Capacitors . . . 300

G. Check the Oscillator Output Voltage . . . 301

H. Check the Oscillator for Frequency Drift . . . 301

I. Check a Receiver for Distortion . . . 302

J. Test Voltages in a Receiver . . . 305

UNIT 16 — RECEIVER TROUBLE SHOOTING . . . 309

JOB SHEET 16 — Receiver Trouble Shooting . . . 310

A. Dead Set . . . 313

B. Distortion . . . 316

C. Fading . . . 317

D. Hum . . . 318

E. Intermittent Reception . . . 319

F. Noisy Operation . . . 320

G. Oscillation . . . 322

H. Weak Reception . . . 324

UNIT 1

THE CHARACTERISTICS OF A FULL WAVE POWER SUPPLY

Reference A — Use of the Cathode Ray Oscillograph in Determining Wave Form of A-C Voltages. Page 2

Exercise A — Determine the Wave Form of A-C Line Voltages. Page 5

Exercise B — Determine the Wave Form of Oscillator Voltages. Page 7

Reference B — The Characteristics of a Full Wave Power Supply. Page 9

JOB SHEET 1 — TEST A FULL WAVE POWER SUPPLY FOR RECTIFICATION, FILTERING, AND VOLTAGE REGULATION. Page 14

USE OF THE CATHODE RAY OSCILLOGRAPH IN DETERMINING WAVE FORM OF A-C VOLTAGES

The cathode ray oscillograph is an instrument designed to show the wave form or relationship of voltages in electrical circuits. It will perform the following functions:

(1) Measure a-c voltages of any frequency.
(2) Determine the wave form of a-c voltages.
(3) Check radio equipment for hum and distortion.
(4) Check modulation percentage.
(5) Check phase relationship.
(6) Align receivers.
(7) Check vacuum tube characteristics.

The voltage provided by an a-c source is alternating according to a definite pattern which is illustrated by a wave form. See Fig. 2. A likeness of this wave form may be reproduced by a cathode ray oscilloscope. The name "oscillograph" is applied to an oscilloscope whose screen is fitted with a transparent graduated scale. This scale may be calibrated to read voltages directly, as on a graph. Since this screen is rarely removed from the instrument, the instrument will hereafter be referred to as "oscillograph".

The oscillograph measures peak to peak values of voltage which would be represented as a single vertical line, except that by means of a timing oscillator, the various instantaneous voltage values are "spread" and appear as a trace (line) on the screen of the oscillograph. This trace portrays the wave form of the voltage and its outline will be one of many possible wave form shapes. To make the wave form trace remain stationary on the screen, the frequency of the timing oscillator must be made the same as (synchronized with) that of the tested voltage.

The cathode ray tube is the heart of the cathode ray oscillograph. In this tube a small beam of electrons, emitted from the cathode of the tube, strikes the screen. This beam actuates the chemically coated inner surface of the screen and causes a spot to fluoresce. The direction of this beam may be controlled by: (1) an electromagnetic field due to current in an external coil or (2) electrostatic force from two sets of plates within the tube. By controlling the voltage applied to these deflecting plates, it is possible to make the spot appear at any position on the screen. The horizontal plates are so named because they control the position of the spot horizontally. The vertical plates control the position of the plates vertically. When an a-c voltage is applied to the vertical plates, the spot is made to travel so rapidly that it appears as a vertical line; voltage applied to the horizontal plates provides a horizontal line.

The wave form of any alternating voltage or current involves two factors, amplitude and time. For example, in the rating "115 volts at 60 cycles per second", the term "115 volts" represents amplitude and the term "60 cycles per second" involves time.

In using the oscillograph, the external voltage whose wave form is to be determined is connected to the terminals marked "vertical". This will cause amplitude to be indicated in the vertical direction.

The horizontal plates are connected by a switch to a source of pulsating voltage generated within the oscillograph by an oscillator of special design. This is called a timing oscillator, and it generates a voltage of saw tooth wave form. This wave form makes it possible to spread the measured voltage in a horizontal direction; and since the frequency of the timing oscillator may be changed by adjusting a calibrated range switch, the frequency necessary for proper timing can be secured. Proper timing is obtained when a trace appears on the screen, portraying the wave form of the external voltage.

When the frequency of the timing oscillator is set to be the same as the frequency of the external voltage, a trace representing one complete cycle of the external voltage will appear on the screen.

When the frequency of the timing oscillator is set to be one-half of the frequency of the external voltage, two cycles appear on the screen. If the frequency of the timing oscillator is one-third the external voltage frequency, three cycles appear on the screen. Thus, if five cycles appear on the screen, the frequency of the timing oscillator will be one-fifth the frequency of the external voltage.

If the timing oscillator voltage is removed from the horizontal plates, a straight vertical trace will show on the screen. The length of this trace is proportional to the peak-to-peak value of the a-c voltage applied to the vertical plates.

The usual oscillograph contains two wide frequency range single stage audio amplifiers. By means of switches one of these amplifiers may be connected to each set of deflecting plates of the cathode ray tube. This permits a smaller applied voltage to be measured. A gain control connected to each amplifier may be used to regulate the amplification of the stage. This makes it possible to regulate the height or width of the pattern on the screen.

Controls of the Oscillograph

The usual oscillograph contains the following controls:

(1) Focus control - an adjustment to provide a clearly defined line or spot on the screen.

(2) Intensity control - an adjustment to provide sufficient brilliance of the line or spot. This should be turned down as low as clear visibility will permit to avoid damage to screen.

(3) On-off (power) switch - usually is ganged with Intensity Control.

(4) Vertical amplifier gain control - an adjustment to vary height (amplitude) of pattern on screen.

CATHODE RAY OSCILLOGRAPH

(5) Horizontal amplifier gain control - an adjustment to vary width of pattern on screen.

(6) Vertical amplifier switch - to switch the vertical amplifier in or out.

(7) Horizontal amplifier switch - to switch out the horizontal amplifier or connect it to the timing circuits.

(8) Synchronizing selector switch - to permit internal, external, or 60-cycle timing.

Note: The above two switches may be ganged into one unit.

(9) Timing range selector - an adjustment to find the approximate frequency required for timing.

(10) Sweep frequency control - an adjustment to provide the exact frequency required for timing or synchronization.

(11) Synchronizing voltage control - an adjustment to "lock" (hold stationary) the pattern on the screen.

(12) Centering controls - an adjustment to center pattern on screen or graph, vertically and horizontally.

Connections to the Oscillograph

(1) Input to vertical amplifier (two terminals).

(2) Input to horizontal amplifier (two terminals).

(3) Input for external synchronizing voltage (two terminals).

(4) Line cord to be connected to 105-125 volt 60 cycle outlet or as otherwise specified in instructions accompanying instrument.

CAUTIONS ON USE OF THE OSCILLOGRAPH

The cathode ray tube in the oscillograph is not only expensive but at the present time such tubes are extremely difficult to obtain. The screen of this tube is easily damaged if one permits a spot or line of great intensity to remain stationary on it.

Intensity and focus controls should be set for a spot or line which is dim but distinct.

The oscillograph should be so placed that the screen is in a shadow, thereby making vision of the pattern on the screen less difficult.

The oscillograph should be left "on" only when in use. Turn off the instrument while changing connections.

Treat the instrument with care; the glass of the cathode ray tube is easily broken, and the elements of the tube may be easily knocked out of line bv excessive jarring.

Determine the Wave Form of A-C Line Voltages

Specifications:

Set the controls of the oscillograph to obtain the following wave shape patterns of line voltage:

1. One cycle
2. Two cycles
3. Three cycles

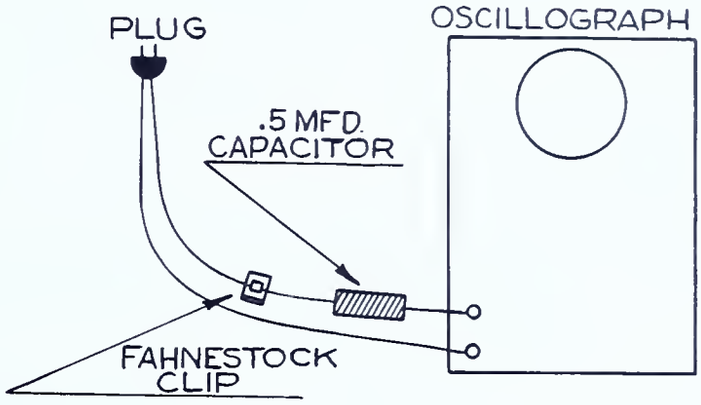

FIG.-1

Tools needed:

1. Screw driver
2. Long nose pliers
3. Diagonal cutting pliers

Materials needed:

1. 12 feet of hook-up wire
2. 1- 0.5 mfd. 600 volt capacitor
3. 1- Plug for a-c outlet
4. 1- Fahnestock clip

Equipment needed:

1. Cathode ray oscillograph

Procedure:

Caution: Assistance of instructor must be obtained for this job.

1. Study instruction manual for adjustments and cautions concerning the oscillograph to be used.

2. Connect vertical terminals of oscillograph to a-c line using plug, capacitor, and wire as shown in Fig. 1.

3. Connect line cord from oscillograph to proper a-c outlet.

4. Adjust controls of oscillograph in the following order:

   a. Line switch to "on"; allow 30 seconds for heating.
   b. Intensity control for spot or line of weak intensity.

   Caution: Do not allow a spot of any great intensity to remain on screen. Keep the intensity control turned down.

c. Focus control for clearly defined spot or line.
d. Centering controls to center spot or line on screen.
e. Vertical amplifier switch to "on" position.
f. Vertical amplifier gain control so height of pattern covers center half of screen.
g. Timing range selector switch to range which includes 60 cycles.
h. Horizontal amplifier switch to "timing" position.
i. Synchronizing selector switch to "internal".

Note: If the above two switches are ganged into one control, set this control (timing) to "internal" position.

j. Horizontal gain control so horizontal pattern covers center half of screen.
k. Sweep frequency control so single line indicates wave form of voltage. See Fig. 2.
l. Synchronizing voltage control so that pattern is stationary on screen.

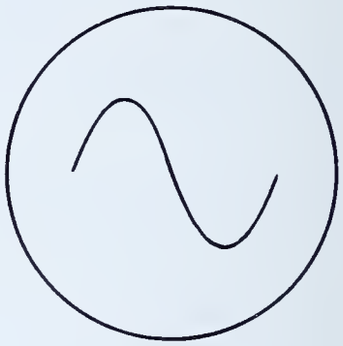

FIG.-2

5. Observe the wave form of voltage.

6. Readjust horizontal and vertical amplifier gain controls to notice change in pattern which occurs when such adjustments are made.

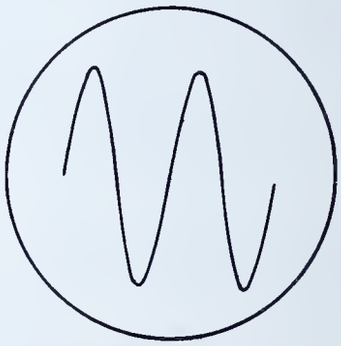

FIG.-3

7. Adjust sweep frequency control so that two complete cycles appear on the screen. See Fig. 3.

8. Adjust sweep frequency control so that three complete cycles appear on the screen. See Fig. 4.

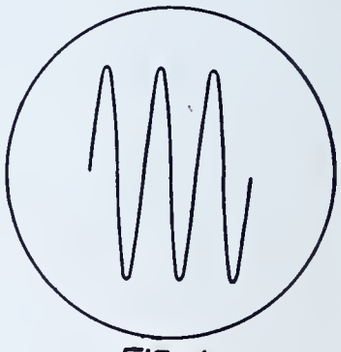

FIG.-4

9. Turn off and disconnect apparatus.

Determine the Wave Form of Oscillator Voltages

Specifications:

Determine the wave form of the voltage output of a beat frequency audio-oscillator at the following frequencies:

1. 50 cycles
2. 500 cycles
3. 2,000 cycles
4. 5,000 cycles
5. 10,000 cycles

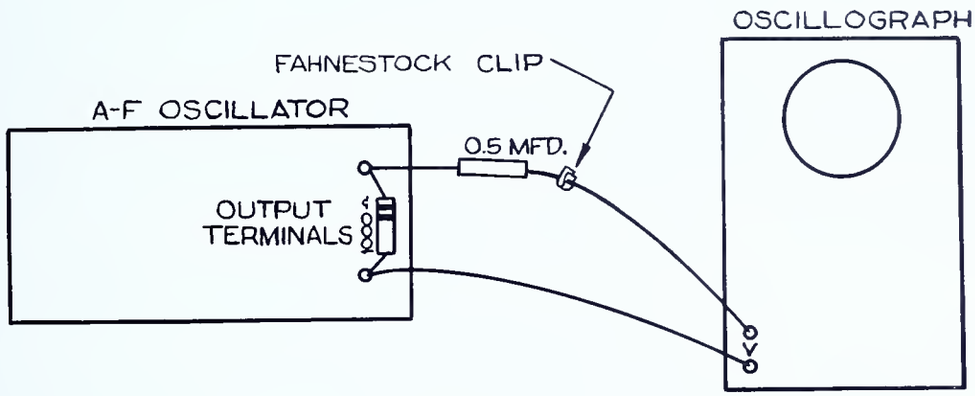

FIG.-5

Tools needed:

1. Long nose pliers

Materials needed:

1. 1- 0.5 mfd. 600 volt capacitor
2. 1- 1000 ohm 1 watt resistor
3. 6 feet hook-up wire
4. 1- Fahnestock clip

Equipment needed:

1. Cathode ray oscillograph
2. Beat frequency audio-oscillator (A-F signal generator)

Procedure:

Caution: Assistance of instructor must be obtained for this job.

1. Connect high impedance output of oscillator to vertical terminals of oscillograph. See Fig. 5.

2. Plug in line cord of each unit to proper a-c outlet and turn units on.

3. Set the beat frequency oscillator control to 50 cycles.

4. Set oscillator output control to half maximum output position.

5. Adjust controls of oscillograph as in previous job for one cycle of wave.

6. Observe the amplitude and wave form of the pattern. Note the size and shape of wave form.

7. Set oscillator frequency control to 500 cycles and adjust oscillograph timing and frequency controls to obtain again one cycle of wave on screen. Compare amplitude and shape of wave form to previous wave form.

8. Repeat adjustments for a 2000 cycle note.

9. Repeat for a 5000 cycle note.

10. Repeat for a 10,000 cycle note.

11. Turn off and disconnect apparatus.

THE CHARACTERISTICS OF A FULL WAVE POWER SUPPLY

General Information:

The full wave power supply is the most common type of power supply encountered in radio work. It supplies the necessary high d-c voltage to the radio for the plates of the tubes as well as a low a-c voltage for the tube filaments.

Power supplies are designed to supply voltage and current as specifically required by some particular radio unit. Since voltage and current requirements of different radio units vary widely, power supplies do likewise. A power supply designed to operate a small receiver could not be used satisfactorily to operate a large transmitter. The power supply must provide the required voltage under existing operating conditions. Some radio units require constant voltage under varying loads; in others the load does not vary appreciably.

Briefly stated, the power supply operates as follows:

(1) The primary of the power transformer is connected to the a-c line; the secondaries supply a-c voltages, the high voltage winding supplying the plates of the rectifier tube while the low voltage windings supply the filaments of the tubes.

(2) The rectifier tube changes the high a-c voltage into pulsating d-c voltage.

(3) The capacitors and chokes filter the pulsating d-c voltage and current to provide smooth d-c power at the output of the unit.

Rectification

The high voltage secondary winding of the full wave power transformer is center-tapped. See Fig. 6. When a-c power is applied to the primary, the voltage across one-half of the secondary from the center tap is directly opposed to (180° out of phase with) the voltage across the other half of the secondary from the center tap. Since the plates of the rectifier tube are connected to the outside leads of the high voltage winding, the polarity is such that plate #1 is positive when plate #2 is negative. See Fig. 7 A.

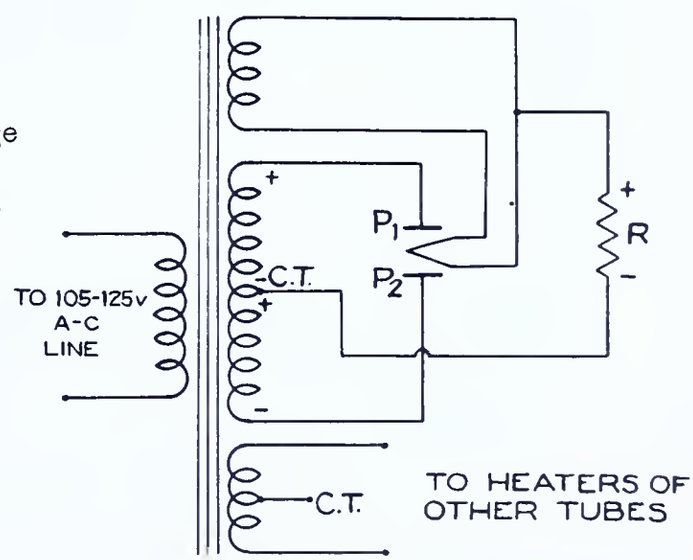

FULL WAVE RECTIFIER CIRCUIT
FIG.-6

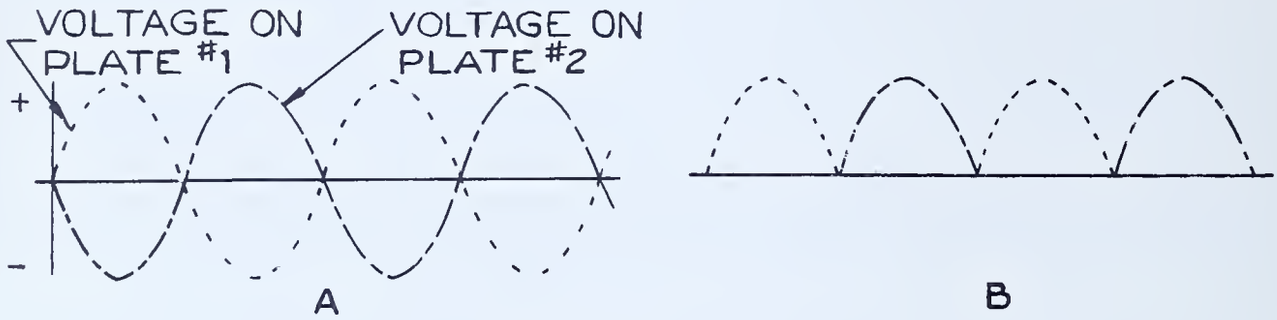

FIG.-7

Electrons are emitted from the filament of the rectifier tube when the filament is heated by the current from the rectifier filament winding. When plate #1 is positive, it will attract the electrons. At the same instant plate #2 is negative, and it repels the electrons.

During the next half cycle the polarity is reversed, and plate #1 is negative and repels the electrons while plate #2 is positive and attracts the electrons. Since the electron flow toward the positive plate is controlled in part by the voltage applied to the plate, the voltage output of the rectifier is pulsating as indicated in Fig. 7B.

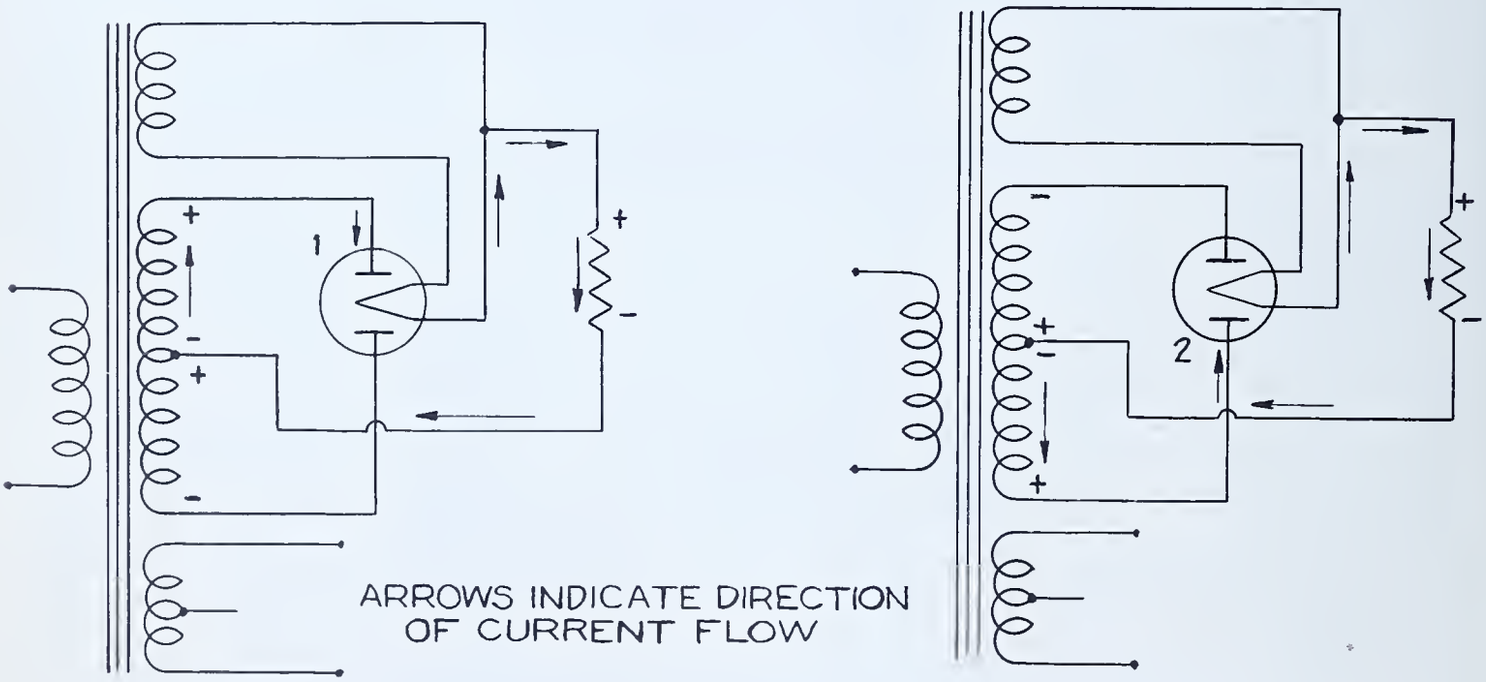

FIG.-8A FIG.-8B

CURRENT FLOW IN THE RECTIFIER CIRCUIT

When plate #1 is positive, load resistor R causes current to flow as indicated in Fig. 8A. During the next half cycle, when plate #2 is positive, current flow is as shown in Fig. 8B.

It will be noted that the current flow is in the opposite direction to the electron flow. Since this is the most generally accepted theory at present, it will be accepted as such. The sketches of this unit are labeled to indicate current flow.

In either case the high voltage center tap is negative with regard to the positive plate, and thus it is the negative connection of the d-c circuit.

The filament of the rectifier tube is electrically connected to the positive plate in either case by the electron flow and thus constitutes the positive connection of the d-c circuit.

Although the plates work alternately, the current flow in the load resistor is always in the same direction and thus constitutes a pulsating d-c flow through the load.

Filtering

If the output of the rectifier tube were connected to the radio directly, the pulsations would enter the circuit and be amplified by the radio, which would result in hum. The pulsating d-c output of the rectifier tube must be changed to a smooth d-c flow. This action is accomplished by the filter system in the power supply. See Fig. 9.

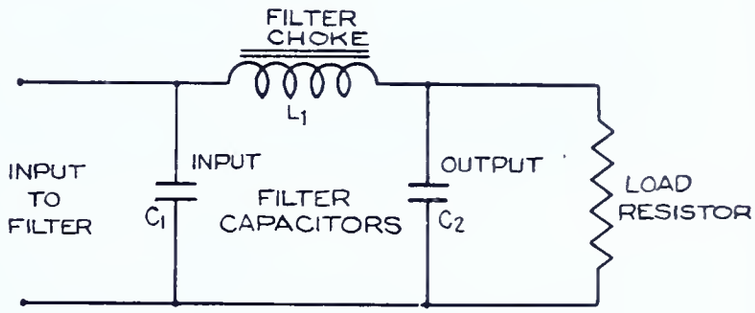

FIG.-9

CAPACITOR INPUT FILTER SYSTEM

The Function of the Filter Capacitor

The pulsating d-c input to the filter system is shown in Fig. 10 (a). The first filter capacitor is charged up to the peak value of the pulsating d-c voltage; see point 1 in Fig. 10 (b). As the voltage output of the rectifier drops to point 2, the filter capacitor discharges through the load until at point 3 the rectifier output again charges the capacitor to point 4. This process is repeated, resulting in the d-c voltage as shown in Fig. 10 (c). This indicates a "ripple" in the voltage.

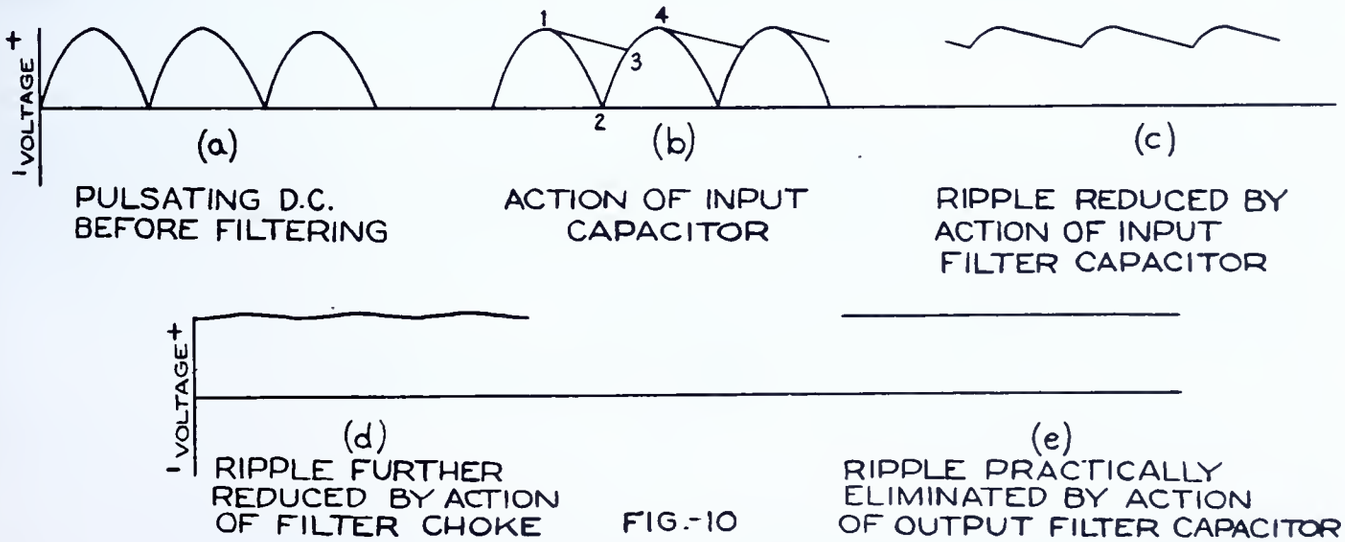

FIG.-10

FILTER ACTION

The Function of the Filter Choke

The filter choke has considerable inductance which opposes any change in the intensity of current flowing in the circuit. This effect tends to permit smooth direct current to flow unimpeded through the unit but prevents pulsations of current. Additional smoothing is thereby obtained. See Fig. 10 (d).

The output filter capacitor acts in the same fashion as the input capacitor, resulting in the smooth d-c output as shown in Fig. 10 (e).

The Choke Input Filter System

Some filter systems omit the input filter capacitor C_1; they are known as the choke input type and are characterized by lower voltage output, but better regulation. (See below.)

In this case the d-c output will be about .637 times the peak value of voltage when there is normal load on the power supply. Since the smoothing action of the first filter capacitor C_1 is lost when using the choke input filter, it may be necessary to add another filter choke L_2 and capacitor C_3 (see Fig. 11) to obtain a smooth d-c output.

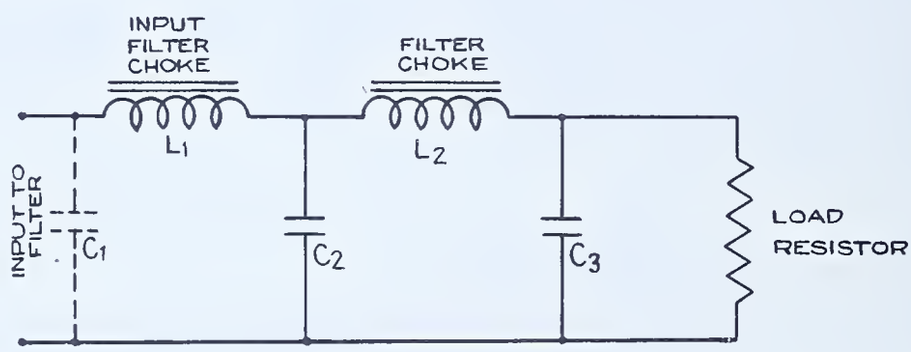

FIG.-11
CHOKE INPUT FILTER SYSTEM

Some input chokes are called "swinging" chokes. These have a large inductance at low currents and a small inductance at high currents. This is because the core is saturated by high currents, reducing the permeability of the iron and thus reducing the inductance.

Regulation

The voltage regulation of a power supply is said to be good if the voltage output of the unit does not drop appreciably as the load (power drawn) from the unit is increased. Regulation may be given as a percentage by using the following formula:

$$\text{Per cent Regulation} = \frac{(\text{No load voltage} \overset{\text{(minus)}}{-} \text{full load voltage})}{\text{FULL LOAD VOLTAGE}} \times 100$$

Note: The smaller the percentage of regulation, the better is the regulation.

As the load on the power supply, which employs the capacitor input filter, is increased from zero to a large value, the output voltage decreases.

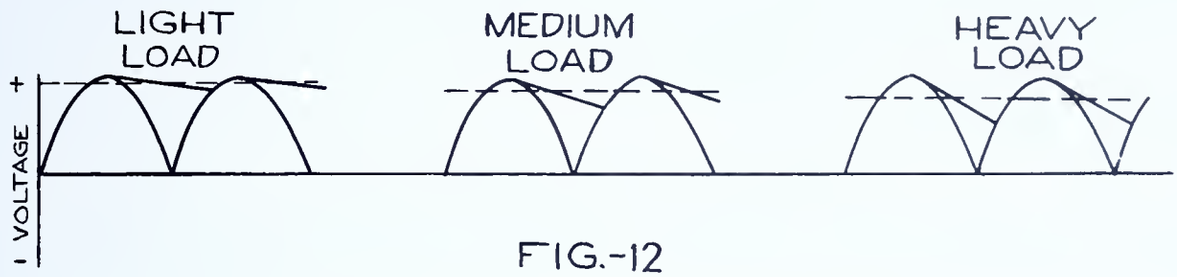

FIG.-12

EFFECT OF LOADING ON FILTER ACTION

In Fig. 12 the dotted line indicates the average voltage output for various values of load current due to the discharging rate of the input capacitor.

If a properly designed choke input filter system is used, the voltage output will be relatively constant at different values of load.

Increasing the load will increase the voltage drop in: (1) the filter choke, (2) the rectifier tube, and (3) the power transformer winding through which the direct current flows, because each of these units has a d-c resistance. To maintain good regulation the d-c resistance of these units should be low. The usual vacuum rectifier tube has a d-c resistance high in comparison to that of a mercury vapor rectifier and thus gives poorer regulation.

Power supplies designed primarily for good regulation often use a mercury vapor rectifier, a choke input filter system with low d-c resistance chokes, and a power transformer with low d-c resistance windings.

Power supplies designed to work on constant loads often use a high vacuum rectifier and a capacitor input filter system. A capacitor input filter system will deliver higher voltage on light loads than a choke input filter system which otherwise uses similar parts.

Checking Hum or Ripple Voltage in a Power Supply

Three types of equipment can be used to indicate hum or ripple voltage from a power supply.

(1) An oscillograph properly connected gives a picture of the actual ripple or wave shape of the hum voltage.

(2) An a-c voltmeter (d-c instrument with copper oxide rectifier) connected in series with a 0.5 mfd. capacitor will measure the a-c ripple voltage. The purpose of the capacitor is to block the d-c voltage.

(3) Connecting a PM speaker in series with a 0.5 mfd. capacitor to the filter output gives a good auditory indication of what happens when a filter capacitor is removed or a filter choke is short-circuited.

TEST A FULL WAVE POWER SUPPLY FOR RECTIFICATION, FILTERING AND VOLTAGE REGULATION

General Information:

The power supply tested in this job should be similar to the one constructed in Job 14 of the Mechanic Learner course. It should also be provided with: (1) suitable switches for opening and shorting circuits and (2) means for connecting meters to the circuit. See Fig. 13. The load resistors are specified to be 10,000 ohms, although any other suitable value may be used if they are of sufficient power rating.

The oscillograph, a-c voltmeter, and PM speaker are all used in this job to indicate hum voltage. If any one of these units is not available, the tests may be carried out using the other equipment.

Specifications:

Determine:

1. Wave shape of voltage applied to rectifier.
2. Wave shape of voltage at rectifier output.
3. Wave shape of voltage at filter output.
4. Regulation curve using capacitor input filter system.
5. Regulation curve using choke input.

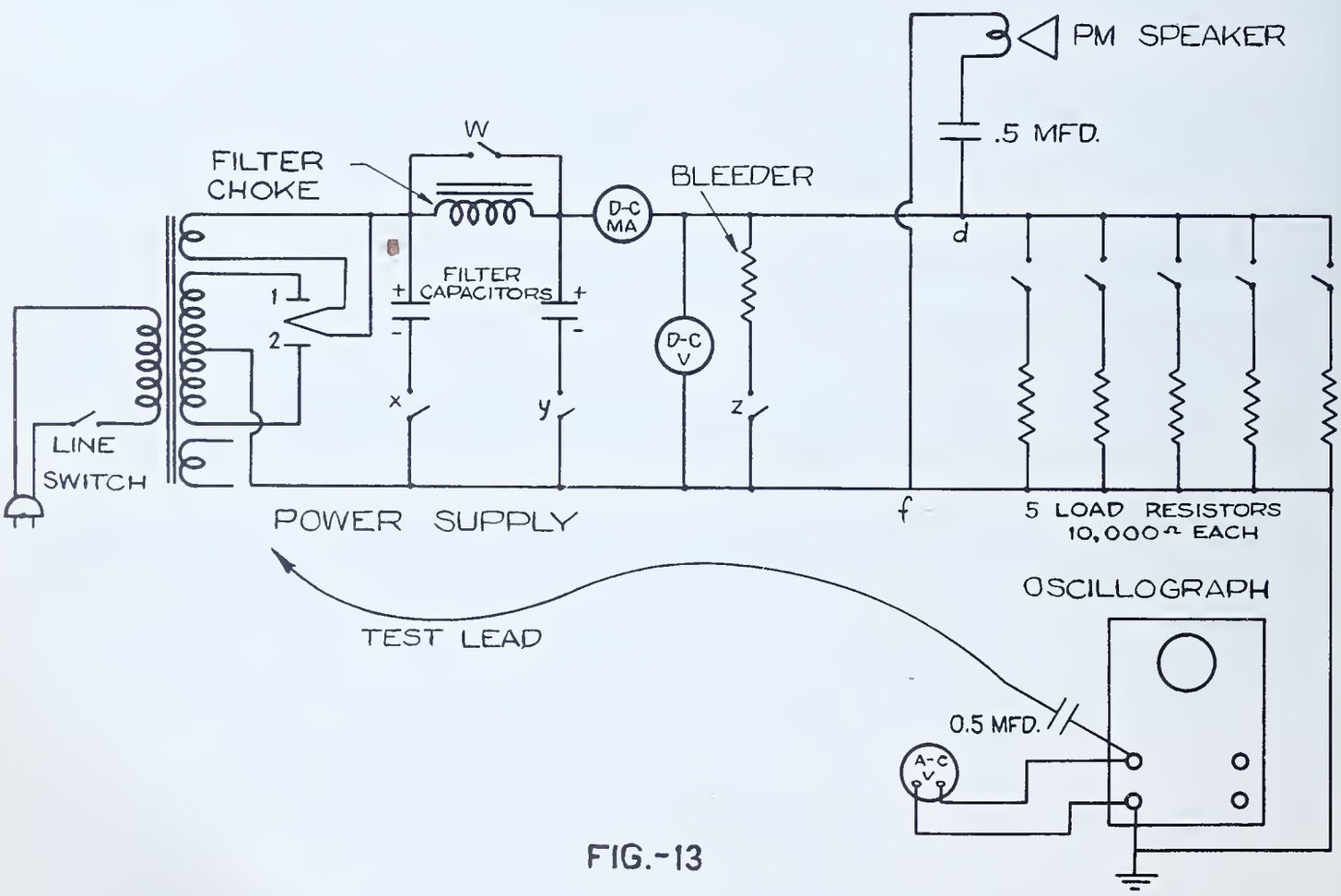

FIG.-13

Tools needed:

1. Soldering iron
2. Long nose pliers
3. Diagonal cutting pliers
4. Screw driver

Materials needed:

1. Solder, rosin core
2. Hook-up wire as needed
3. 2- 0.5 mfd. capacitors, 600 w. v.
4. 5- 10,000 ohm 10 watt resistors
5. Power supply with rectifier tube
6. Test leads
7. 1 piece of graph paper $8\frac{1}{2}$" x 11"

Equipment needed:

1. Power Supply with following specifications:
   a. Wiring to be in accordance with Fig. 13
   b. 105-125 volt, 60 cycle a-c input
   c. 70 ma., 300 volt d-c output
   d. No load d-c output - not over 500 volts
   e. Rectifier - full wave
2. Voltmeter, 0-500 volt, d-c
3. Voltmeter, 0-300 volt, a-c
4. Milliammeter, 0-150 ma., d-c
5. Oscillograph
6. PM speaker

Procedure:

1. Connect d-c milliammeter and voltmeter in circuit as indicated in Fig. 13.

2. Close circuits at "w" and "z". Open circuits at "x" and "y".

3. Connect oscillograph and a-c voltmeter to power supply as indicated in Fig. 13, attaching test lead to plate #1.

4. Plug unit and oscillograph into 105-125 volt, 60 cycle a-c outlet and turn line switch of both units to the "on" position.

5. Synchronize pattern on screen of oscillograph. Secure assistance of the instructor for operation of the oscillograph. Timing oscillator should be set for a 30 or 60 cycle "sweep" frequency.

   Caution: Do not permit a line or spot of great intensity to remain stationary on screen of oscillograph.

In the following steps, enter results and sketches in notebook on a copy of the proper form on Question Sheet.

6. Draw a sketch like the pattern on the oscillograph screen. Read a-c voltage. Tabulate all readings on copy of form 1.

7. Connect test lead to plate #2. Note change in wave on oscillograph; read a-c voltage.

8. Connect test lead from oscillograph to point "d". Adjust the oscillograph for a single trace of wave form and sketch pattern. Read other instruments and tabulate results.

9. Connect PM speaker as indicated in Fig. 13 and observe tone.

10. Close switch "x". Sketch this new pattern obtained. Note change in speaker tone. Read instruments. In each of the following steps, make sketch of oscillograph pattern and tabulate all instrument readings in notebook.

11. Open switch "w".

12. Close switch "y".

13. Open switch "z".

    Caution: If the d-c voltmeter reads higher than 500 volts, close switch immediately and do not tabulate readings for this step.

14. Close switch "z". Connect five 10,000 ohm resistors in parallel to "d" and "f" (output). Tabulate the readings taken in this step on both forms 1 and 2.

15. Remove PM speaker connections. Take d-c voltage and current readings for each of the following steps and record on copy of form 2. Observe any change in wave form in oscillograph as load is changed.

16. Remove one 10,000 ohm resistor.

17. Remove second 10,000 ohm resistor.

18. Remove third 10,000 ohm resistor.

19. Remove fourth 10,000 ohm resistor.

20. Remove fifth 10,000 ohm resistor.

21. Open switch "z".

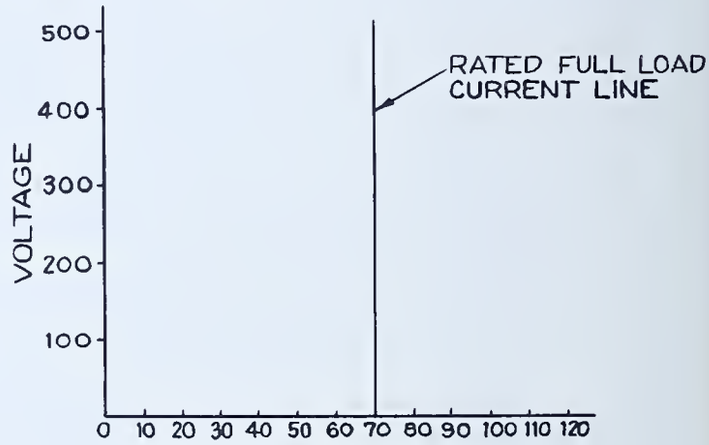

FIG.-14

    Caution: If the d-c voltmeter reads higher than 500 volts, close switch immediately and do not tabulate readings for this step.

22. Open switch "x". This changes the filter circuit into a choke input type.

23. Repeat Steps 15,16,17,18,19,20 and 21, taking readings for every step.

24. Draw curve on graph paper using voltage as the vertical axis (or ordinate) and current as the horizontal axis (or abscissa) for readings taken in Steps 14,16,17,18,19,20 and 21. Indicate the rated full load current line. See Fig. 14.

25. Draw curve for Step 23. Indicate the rated full load current line. See Fig. 14.

QUESTIONS

Place the answers to these questions in your notebook or on form as directed by instructor.

1. Name the controls on the oscillograph and give the purpose of each.
2. Name the connections to the oscillograph.
3. What cautions must be observed in using the oscillograph?
4. What type of tube in the oscillograph provides the pattern?
5. What two factors may the wave form of an a-c voltage involve?
6. Does the oscillograph measure average, effective, or peak-to-peak values of a-c voltages?
7. If four cycles of an a-c wave appeared on the screen, what would be the frequency of the voltage of the timing oscillator if the measured voltage was 120 cycles?
8. To which terminals does one apply the voltage to be measured?
9. How many amplifiers does the usual oscillograph employ?
10. What is the purpose of the vertical and horizontal plates in the cathode ray oscillograph?
11. What characteristics of the power supply may be observed by use of the oscillograph?
12. Why is the oscillograph an important instrument?
13. What is the most common type of power supply?
14. What is the purpose of a power supply in radio equipment?
15. How do power supplies differ?
16. Why is the high voltage winding of the power transformer center tapped in a full-wave power supply?
17. Do both plates of the rectifier attract electrons at the same time?
18. Why is the center tap of the high voltage winding negative?
19. Why is the filament of the rectifier positive?
20. What is the phase relationship of the voltage on the plates of the rectifier?
21. Why are electrons emitted from the filament of the rectifier?
22. Is current flow from the rectifier continuous?
23. Why must the output of the rectifier be filtered before reaching the radio?
24. Where would the highest d-c voltage in the power supply be measured?
25. What is connected across the highest d-c voltage in the power supply used in this job? Why?
26. What is the purpose of the filter in the power supply?
27. What happens to the charge in the first filter capacitor when the voltage output of the rectifier is zero?
28. Why is an inductance used as a filter choke?
29. What is a "swinging" choke?
30. What is the advantage of a capacitor input filter system?
31. What is meant by good regulation?
32. What is the advantage of a choke input filter?
33. Why does a capacitor input filter system have poor regulation?
34. What factors determine regulation?
35. Explain why there was a difference in wave shape in the oscillograph with no load and maximum load as in Steps 13 and 14.
36. Compare the hum at the power supply output for no load, rated load, full load and overload conditions. Compare the hum for the d-c voltage output under the same conditions.
37. What conditions of the power supply can cause a hum ("hum voltage") to be heard, seen or measured?

TABULATION FORMS

FORM 1

Step	Pattern of Screen	Voltage		Current
		A-C	D-C	
Provide eight lines one inch apart and number 6,7,8,10,11, 12,13,14.	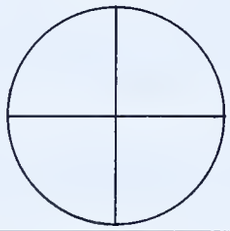			

FORM 2

Step	Voltage		Current
	A-C	D-C	
Provide fifteen lines one-half inch apart and number 14,16,17, 18,19,20,21,22, 23a,b,c,d,e,f,g.			

References:

Everitt, W. L. et al., Fundamentals of Radio, pp. 28-29. 140-152. 206-212.
Henney, K., Principles of Radio (Fourth Edition), pp. 15-19, 430-458, 533-534.
The Radio Amateur's Handbook (Any Edition), A. R. R. L., Chapters on Power Supply, Adjustment of Phone Transmitters, Measurements and Measuring Equipment.
The Radio Handbook (Any Edition), Editors and Engineers, Chapters on Power Supplies, Test and Measuring Equipment.

UNIT 2

THE ELECTRON-COUPLED OSCILLATOR

Reference C — The Electron-Coupled Oscillator. Page 20

Reference D — R-F Voltage Indicators. Page 24

Reference E — R-F Current Indicators. Page 29

Reference F — R-F Power Indicators. Page 30

Reference G — The Dummy Antenna. Page 31

Reference H — The Heterodyne Frequency Meter. Page 34

JOB SHEET 2 — CONSTRUCT AN ELECTRON-COUPLED OSCILLATOR. Page 37

Part I — Construct an Electron-Coupled Oscillator with Untuned Output. Page 39

Part II — Convert ECO Having Untuned Output Circuit to One with a Tuned Output Circuit to Provide Frequency Doubling. Page 42

THE ELECTRON-COUPLED OSCILLATOR

General Information:

Vacuum tube oscillators are used in radio circuits to generate a-c voltages. Most oscillators are crystal controlled or self-controlled. In a crystal controlled oscillator a crystal is used to establish and control the frequency of oscillation. In the common self-controlled oscillator the LC (Inductance and Capacity) elements in the circuit determine the frequency of oscillation. There are many types of self-controlled oscillators, each one being best suited for a particular job.

The electron-coupled oscillator is used as:

(1) The signal source in the r-f test oscillator.
(2) A signal source in the heterodyne frequency meter.
(3) The signal generating device in a variable frequency transmitter.

The electron-coupled oscillator is one of the most stable (maintains a constant frequency) of the self-controlled types. Voltage or load variations make little change in operating frequency.

The electron-coupled oscillator is stable because:

(1) There is very little coupling between the output and frequency control circuits. Variations in load in the output thus have little effect on the frequency generated.

(2) Voltages on the tube used in the electron-coupled oscillator may be adjusted so that slignt variations in supply voltage have little effect on the frequency generated.

Advantages of the Electron-Coupled Oscillator

(1) It generates many harmonics, thus providing more signal frequencies by which a receiver or transmitter may be aligned.

Note: A harmonic of a given frequency is any frequency which is a whole number multiple of the original one.

(2) Its stability provides certainty as to frequency generated.

(3) The easy adjustability of its frequency makes its use possible in many applications.

The Disadvantages of the Electron-Coupled Oscillator

(1) The extreme care required in design and construction to provide good stability.

(2) The power losses between cathode and filament caused by operating the cathode above chassis r-f potential.

The Oscillator Circuit

Because a vacuum tube can amplify. it has the ability to produce oscillation by "feeding back" some of the output power to the input circuit in the correct phase or polarity.

In the e.c.o. (electron-coupled oscillator) circuit it is necessary to use a screen grid type tube, such as a tetrode, pentode, or a beam power tube. The cathode, grid, and screen grid comprise the basic oscillating circuit. The screen grid of the tube functions as the plate of a Hartley triode oscillator.

Feedback is obtained in the grid tank circuit by making the cathode tap on L_1 (Fig. 1) above the ground connection; this applies an r-f voltage to the cathode. The position of the cathode tap is rather critical but should be somewhere between one-fifth and one-half of the total number of turns. Experimentation should be made to determine the exact point at which the required power output and frequency stability are achieved.

The screen grid intercepts a small portion of the electron stream, sufficient to maintain oscillation. The remaining electrons go to the plate and develop an r-f voltage across the r-f choke (See Fig. 1) or across the tuned plate tank circuit L_2, C_2 as shown in Fig. 2. By operating the screen grid at chassis r-f potential (usually zero r-f voltage) and at positive d-c potential, the capacitive coupling between the output and oscillator circuits of the tube is minimized; and the circuits are effectively isolated from each other. Thus, any variation in loading of the output circuit, which has an effect upon the plate circuit, has very little effect upon the oscillating circuit.

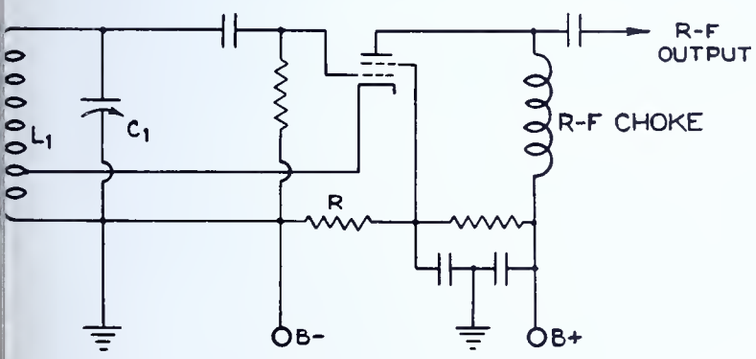

FIG.-1

Electron-coupled Oscillator with Untuned Output

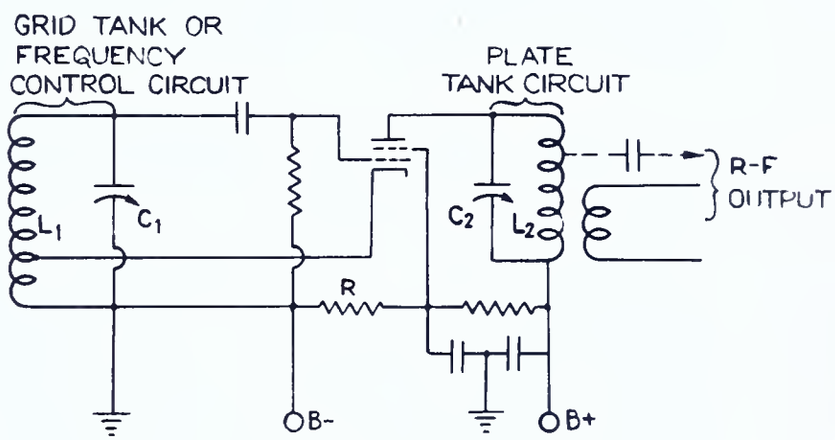

FIG.-2

Electron-coupled Oscillator with Tuned Output

Furthermore, in the e.c.o. there should be no magnetic coupling between the output circuit and the frequency control circuit; thus, the coupling between these two circuits, which might tend to change the frequency, is reduced to a minimum.

The frequency will shift slightly in one direction with an increase in screen voltage; an increase in plate voltage will cause it to shift in the other direction.

A satisfactory condition of stability in operation, that is, independence of variations in frequency caused by changes in plate and screen grid voltages, is obtained by adjusting the screen grid voltage to obtain that stability. This will result in a ratio of the plate and screen grid voltages of between two to one and five to one. Slight changes in voltage will not affect the frequency, but good regulation of the power supply is essential for frequency stability. The following are common indications of good frequency stability:

(1) A steady tone in the speaker of the receiver used to check the oscillator.
(2) A constant reading on the carrier-level indicator connected to the checking receiver.
(3) A steady frequency indicated by the heterodyne frequency meter. See Reference H.

As in all self-controlled LC oscillators, the frequency of oscillation depends chiefly upon the values of inductance (L) and capacity (C) of the tuned grid circuit.

In the basic oscillator circuit the output frequency is the same as the fundamental of the tuned LC circuit. The frequency of the output voltage of the choke output e.c.o. circuit (Fig. 1) will depend upon the tuned LC circuit. In the modified e.c.o. (Fig. 2) an adjustment of the constants L_2 and C_2 in the plate circuit permits tuning the output to a harmonic of the fundamental frequency generated in the grid circuit.

The e.c.o. may operate under class A, B, or C conditions; but for highest efficiency, power output, and high harmonic content, class C operating conditions are necessary.

The class (A, B, or C) refers to the bias voltage on the grid of the tube as compared to the plate operating voltage. In class C operation the bias voltage is about double the cut-off value. Cut-off is the grid bias which is required to limit the plate current to zero when there is no signal input to the grid. The bias voltage may be either fixed or self-bias. For self-bias some of the power, which is fed back to the input circuit from the output circuit, develops the bias for the tube through rectification within the tube. This happens because the grid is driven positive, and grid current flow results. The correct value of the grid bias is dependent upon the type of tube, class of operation, amount of feedback, and plate voltage used.

Operation of the unit as an oscillator can be checked with a neon bulb, or some other r-f voltage or current indicator (see Reference D, "R-F Voltage Indicators", and Reference E, "R-F Current Indicators") while the frequency of oscillation can be checked with an absorption type frequency meter or other r-f frequency measuring instruments.

Since the e.c.o. is a variable frequency oscillator, it should oscillate through the entire range of the tuning capacitor. It must be noted, however, that each time the tuning capacity is changed a different frequency will result. Thus, in a circuit such as in Fig. 2, to secure maximum output the plate tank circuit must be tuned to resonance every time the grid tank tuning capacitor is changed. In other words, the frequency of the output circuit must be changed each time the frequency of the tuned grid circuit is changed.

For testing the e.c.o., an ordinary 250-400 volt power supply is satisfactory; however, most applications of the e.c.o. require a power supply which incorporates a voltage regulating device.

When the oscillator is used as part of a transmitter, r-f energy is transferred to an antenna or succeeding amplifier stage. Under these conditions r-f energy will be radiated into space. To simulate actual transmitting conditions of an oscillator for test purposes, (without radiating a signal), a "dummy load" is connected to the output to absorb the oscillator power. This load may be a non-inductive resistor or a light bulb, either of which must have a power rating at least that of the oscillator output. See Reference F, "R-F Power Indicators" and Reference G, "The Dummy Antenna". It will be noted that as the load is applied, the plate current will rise because of the power absorbed by the load.

The stability of an oscillator can be checked with a heterodyne frequency meter by tuning to the zero beat point. See Reference H, "The Heterodyne Frequency Meter". If the whistle does not reappear of its own accord, the oscillator is said to have good frequency stability. If the whistle reappears (without turning the tuning dial), the oscillator is said to be unstable or drifting.

R-F VOLTAGE INDICATORS

General Information:

Ordinary voltage indicators will not respond to an alternating voltage whose frequency is in the radio frequency range. Because of their mechanical inertia and electrical characteristics, the ordinary a-c voltmeters do not permit response to a-c voltages of such high frequency. However, there are several types of r-f voltage indicating devices available, which are relatively simple to use.

The Neon Lamp

Certain gases, namely, neon, argon, and helium, will glow when placed in an r-f field sufficiently strong to cause ionization. The brilliancy of the glow is an indication of the strength of the r-f voltage producing the field; greater brilliancy indicates a higher voltage and less brilliancy a lower voltage.

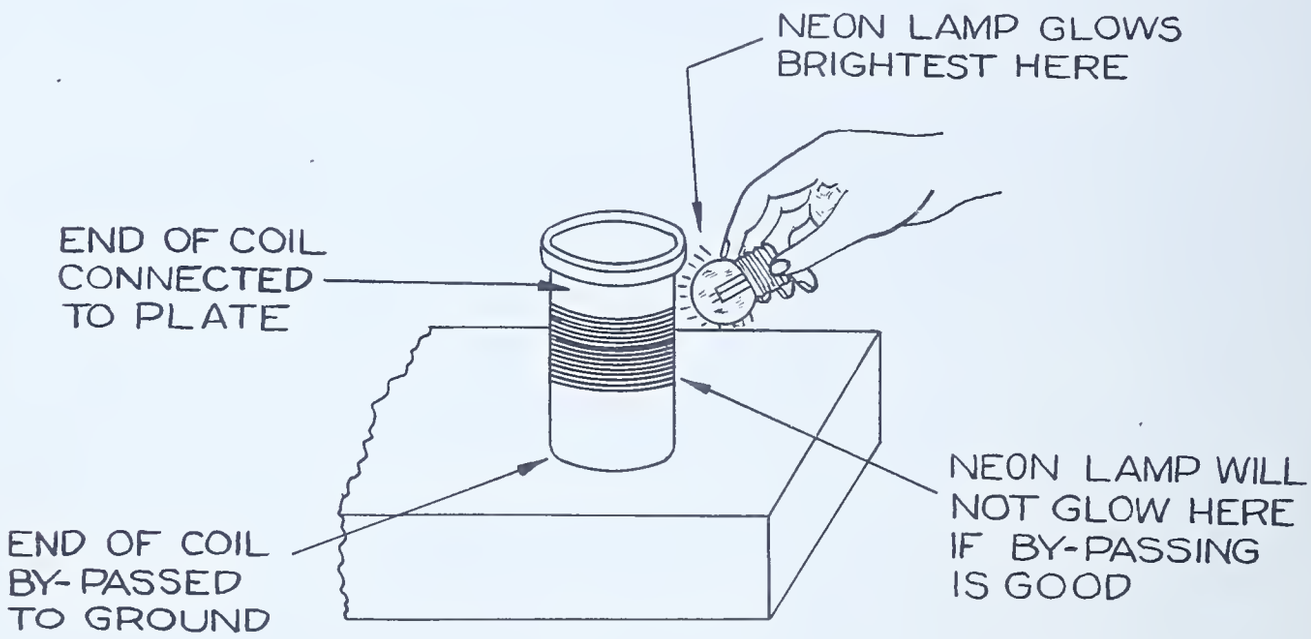

FIG. 3

To use the neon lamp as an r-f voltage indicator, the lamp is held by the base and the glass envelope brought near the source of r-f voltage (see Fig. 3). As points of higher or lower voltage are located, the glow will increase or decrease in brilliancy. The neon lamp provides a means of comparing the relative r-f voltage at different points.

The Vacuum Tube Voltmeters

The vacuum tube voltmeter, if properly designed, is adaptable to r-f voltage measurements because it does not discriminate against the frequency of the voltage being measured. Special adaptations include the use of a probe type head which contains the rectifying tube. This head is used in order to minimize the capacity loading effects which would be present were ordinary test leads used.

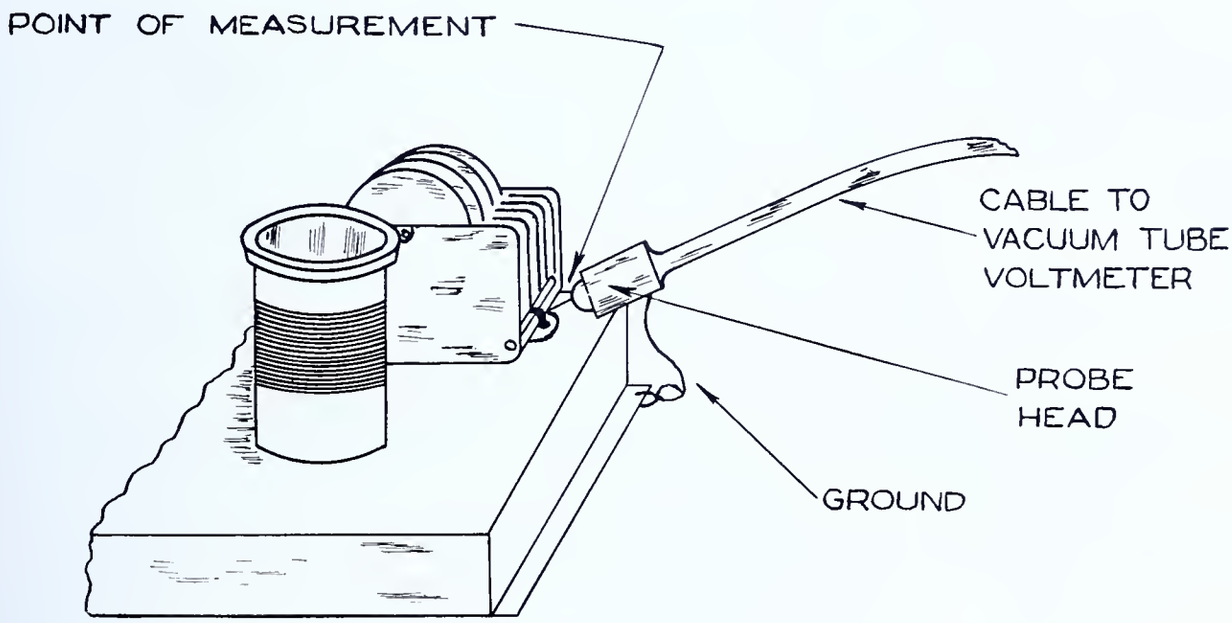

FIG.-4

To measure an r-f voltage with a vacuum tube voltmeter, the probe terminal (see Fig. 4) should be placed in contact with the high potential side of the circuit; and the ground lead should be connected to the ground side of the circuit. The proper range switch setting is selected to permit the r-f voltage existing at the point of measurement to be read on the instrument scale.

The Oscillograph as an R-F Indicator

The oscillograph may be used to indicate the presence of hum modulation and the amplitude of an r-f voltage.

To measure the amplitude of an r-f voltage, such as that produced by an r-f oscillator, the horizontal sweep frequency control is set to 60 cycles per second. The control of the vertical amplifier should be placed in the "off" position because the vertical amplifier is not designed to respond to radio frequencies.

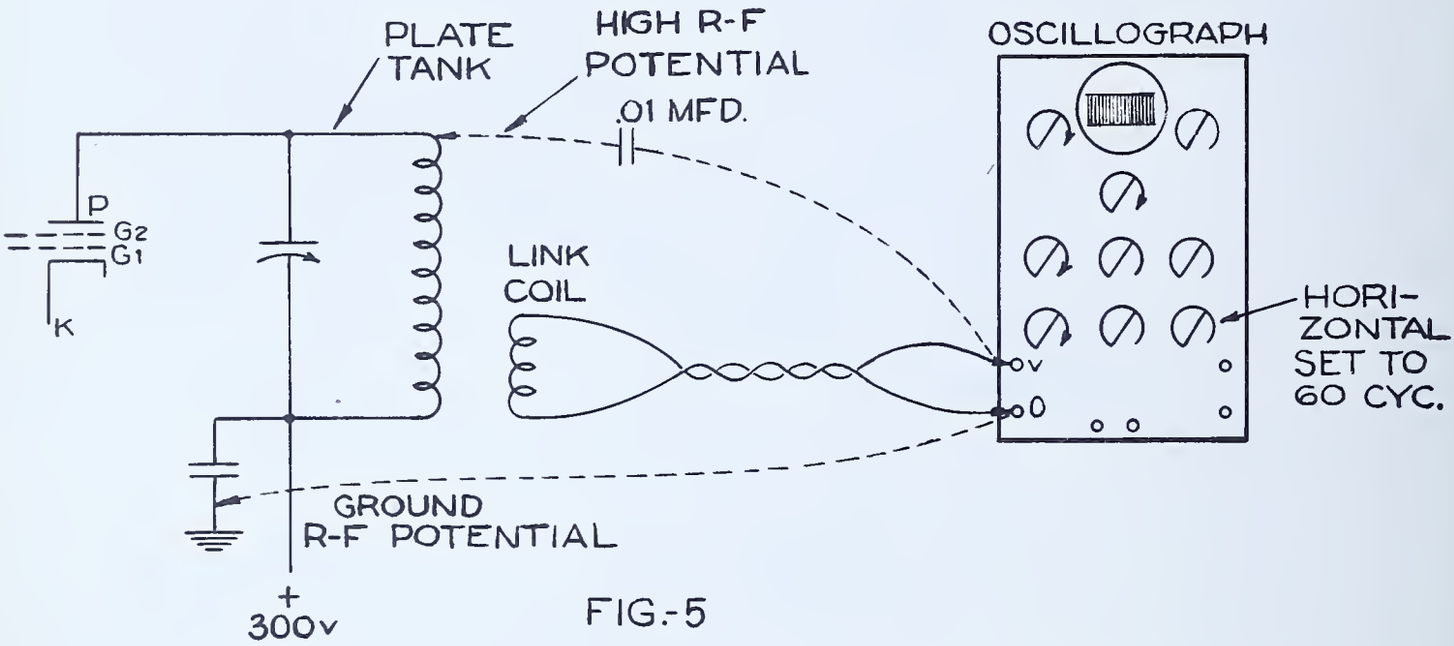

FIG.-5

The r-f voltage to be measured is coupled to the vertical plate terminals "V" and "O" on the control panel. (See Fig. 5). In case direct coupling is used (see dotted lines in Fig. 5), make sure that the terminal marked "O" (which is at ground potential in the oscillograph) is connected to the ground r-f potential side of the tank circuit, and the "V" terminal is connected to the high r-f potential side of the tank circuit.

The face of the oscillograph tube is equipped with a chart divided into uniform divisions. (See Fig. 6.) If the vertical deflection sensitivity of the oscillograph is known (see manufacturer's instruction manual), the vertical deflection of the pattern obtained on the oscillograph chart may be interpreted in terms of volts. For example:

Deflection sensitivity = 20 volts per inch
Deflection obtained 2 inches
Measured Voltage = 20 x 2 = 40 volts

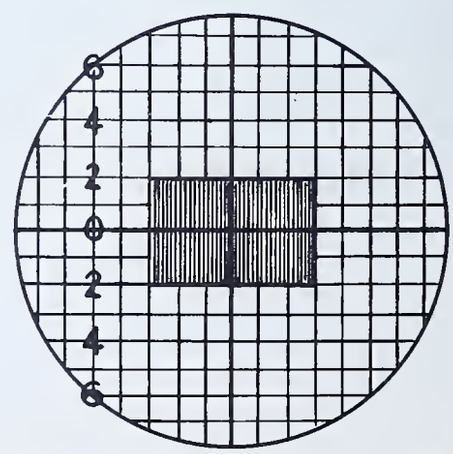

OSCILLOGRAPH CHART
FIG.-6

A. To Use the Oscillograph for Measuring the Amplitude of the R-F Voltage

1. Center and adjust intensity of spot on screen.

   Caution: Do not permit spot of high intensity to remain on screen.

2. Set the horizontal sweep frequency control to 60 c.p.s.

3. Turn the vertical amplifier control to the "off" position.

4. Couple the source of r-f voltage to terminals "V" and "O" as shown in Fig. 5, using a five-turn link coil and twisted-pair cable.

   Note: The closeness of coupling will affect the relative voltage applied to the vertical plates.

5. Observe the deflection in inches as it appears on the cross-section screen. Fig. 6.

6. Multiply the deflection in inches bv the deflection sensitivity of the oscillograph used.

For indicating the presence of hum modulation in the r-f voltage, similar connections and control settings may be used. The shape of the pattern obtained indicates the presence of hum modulation.

Fig. 7A shows the resulting pattern with no modulation present in the r-f voltage, while Fig. 7B shows the pattern resulting from the presence of hum modulation.

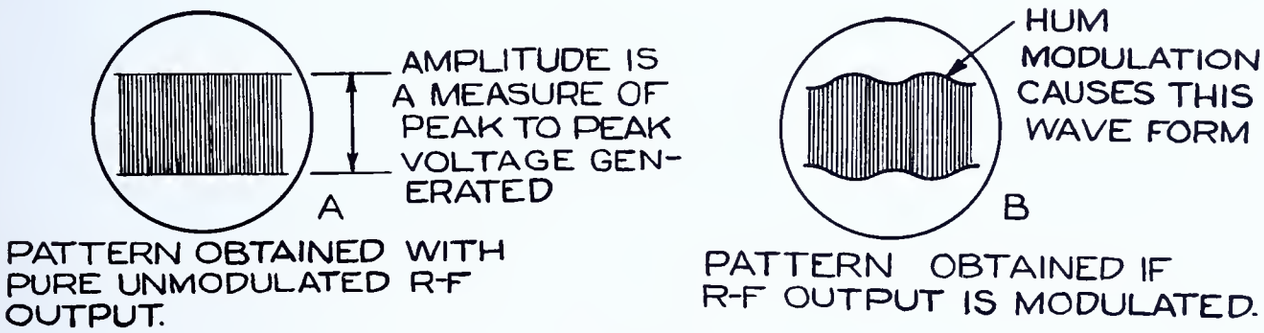

FIG.-7

B. To Use the Oscillograph for Detecting the Presence of Hum Modulation in the R-F Voltage

1. Center and adjust intensity of spot on screen.

2. Set the horizontal sweep frequency control to 60 c.p.s.

3. Place the vertical amplifier control to the "off" position.

4. Couple tne source of r-f voltage to terminals "V" and "O" by means of a five turn link coil as shown in Fig. 5.

5. Observe the wave form of the pattern appearing on the screen.

6. Compare the resulting pattern to Fig. 7A or 7B. Note that Fig. 7A shows the absence of hum modulation and Fig. 7B shows the presence of hum modulation.

Note: The amount of hum modulation present is represented by the amplitude of the deviations from the straight line pattern.

R-F CURRENT INDICATORS

General Information:

The flow of current at any frequency in a conductor produces heat. The effect of this heating may be used as a basis for measuring the r-f current.

Radio frequency current indicators are used to compare or measure the flow of r-f current, for example, current consumed by a load, such as an antenna system.

Like other current indicators, those described below are inserted in series in the circuit.

The Incandescent Lamp

The intensity of current flow is measured by comparing the brilliancy of the lamp through which the r-f current is passed to that of a standard lamp of equal wattage rating. This is done by lighting the standard lamp to an equal brilliancy by means of direct current or low frequency alternating current and then measuring the current consumed by the standard lamp.

The Hot Wire Ammeter

Radio-frequency current may also be measured by the hot wire ammeter. In this instrument the current passes through a high resistance wire of relatively small diameter. The heat causes the wire to expand. Expansion of the wire relieves pressure on a delicate spring which moves the pointer across the scale, thus indicating the value of current flow.

The Thermocouple Galvanometer

Radio frequency current flowing in the thermocouple circuit heats a junction of two dissimilar conductors which produces a thermoelectric voltage. The output of the thermocouple is connected to a d-c milliammeter or galvanometer. The voltage generated causes current to flow through the movement which indicates the value of current.

R-F POWER INDICATORS

The Pick-up Loop and Lamp Indicator

A simple means of indicating the presence of r-f current at various points in the circuit is by application of the principle of electromagnetic induction.

The field set up about a circuit carrying r-f current varies at the same rate as the frequency of the r-f current, and it will induce a voltage in a coil placed in magnetic relation to the r-f field. The induced voltage will cause a flow of current when the coil circuit is closed. If the circuit contains a power consuming device, such as an incandescent lamp, the amount of current flowing in the closed loop will be indicated by the brilliancy of the lamp. See Fig. 8 (a).

The lamp is lighted by current which results from the induced voltage set up in the loop. The brilliancy of the lamp will be an indication of the relative amount of current present at any particular point in the source circuit. Inspection of Fig. 8 (b) will show how the pick-up loop and lamp are used as an r-f indicator.

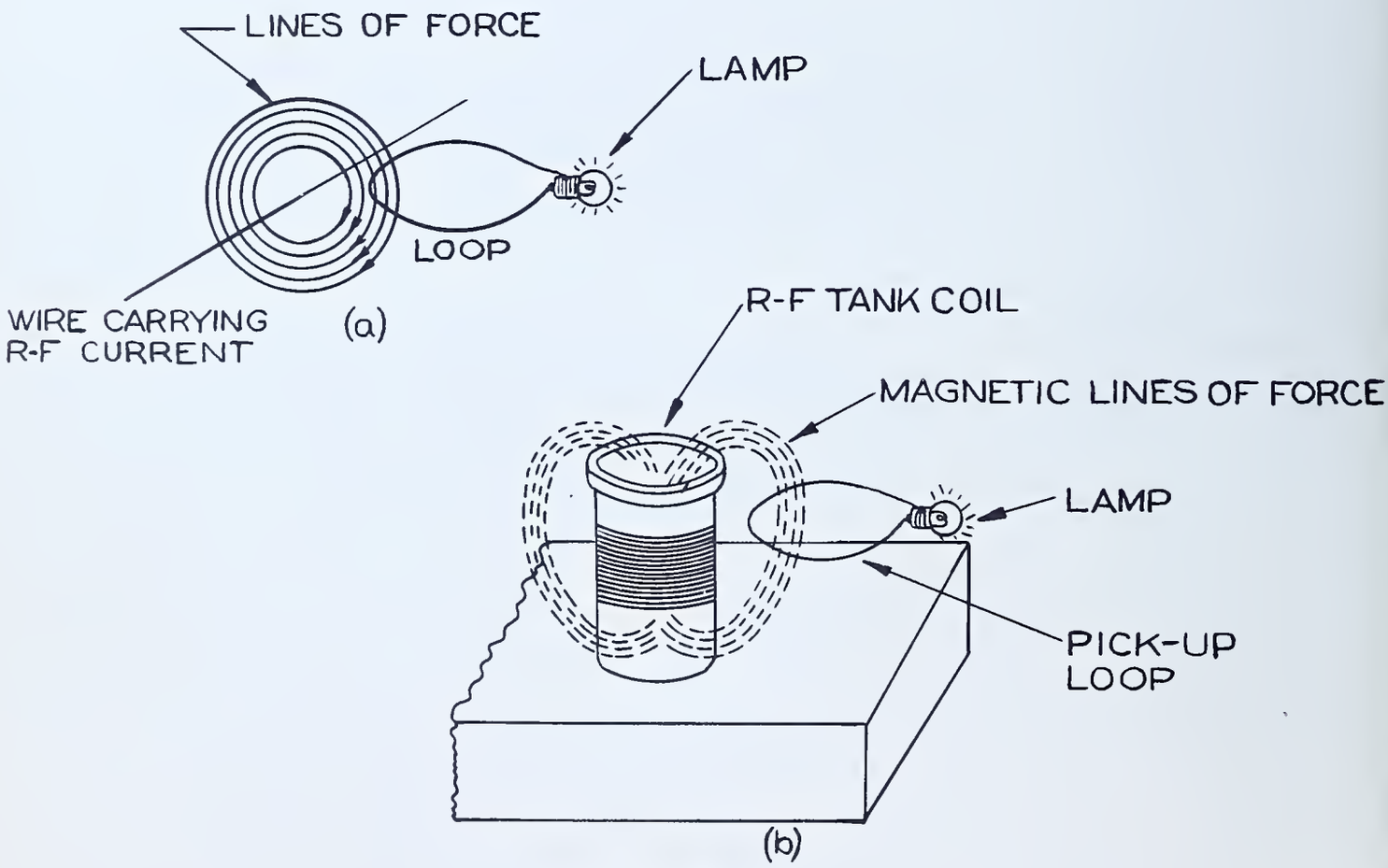

FIG.-8

THE DUMMY ANTENNA

General Information:

A "dummy" antenna is coupled to a source of r-f energy so that the r-f energy will be absorbed or dissipated rather than radiated. It consists of a tuned circuit capable of resonance at the frequency being generated, plus a resistive element for the dissipation of the power present in the dummy antenna circuit. A comparison lamp (R_1-Fig. 9), which is lighted from the standard a-c voltage source, is used to indicate the amount of power being absorbed by the dummy antenna. When the lamp in the dummy antenna circuit is lighted to the same brilliancy as the lamp lighted from the a-c line, the power used by the lamp in the dummy circuit is the same as that used by the comparison lamp. The wattage rating of the two lamps to be used must be the same, and this rating depends upon the power output rating of the r-f voltage generating source.

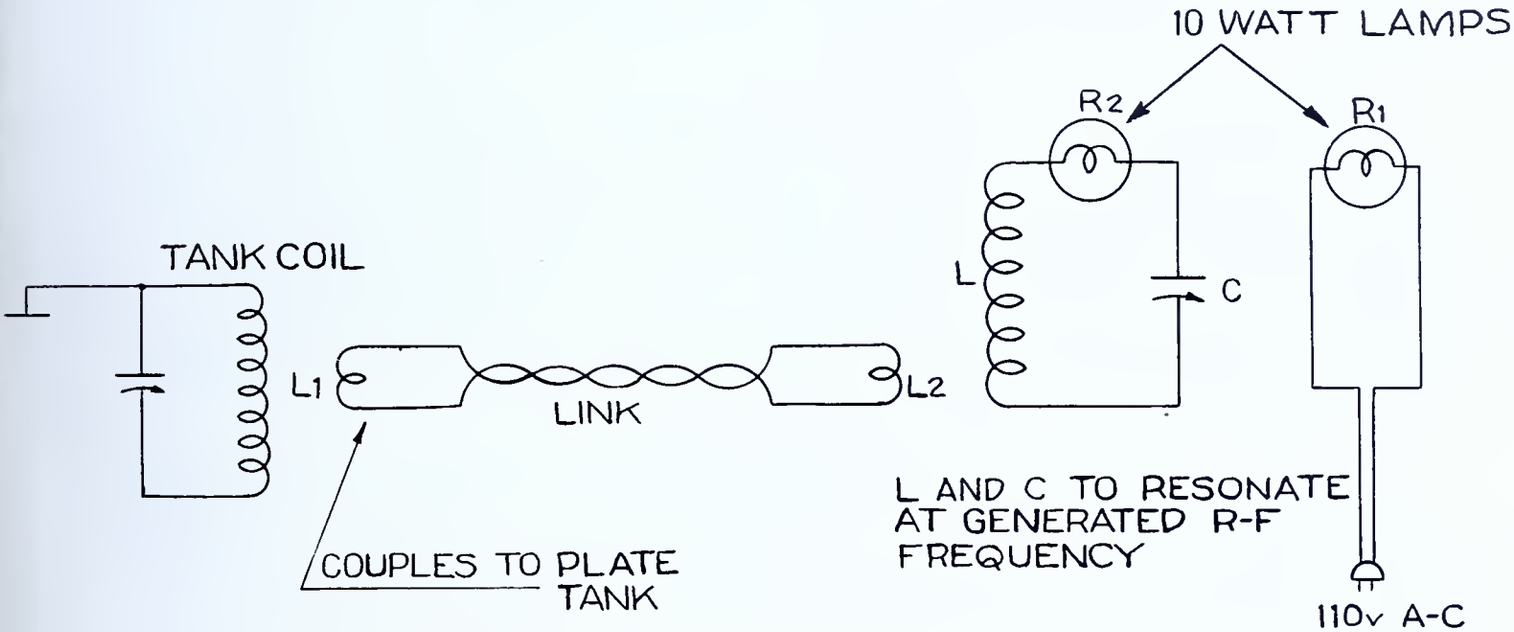

DUMMY ANTENNA CIRCUIT
FIG.-9

The dummy antenna is coupled to the source of r-f energy by means of the link coils L_1 and L_2 which are connected together with a length of twisted pair cable or coaxial line. See Fig. 9. Coupling is affected by placing L_1 around the plate tank circuit in such a way that the lines of force forming the r-f field about the tank coil cut across the turns of the link coil L_1. (See Fig. 10.) This requires that the link coil be so placed that: (1) it lies within the r-f field, and (2) the axes of the link and the tank coil to which it is coupled be at some angle other than 90° with respect to each other. This allows proper transfer of the r-f energy to the link.

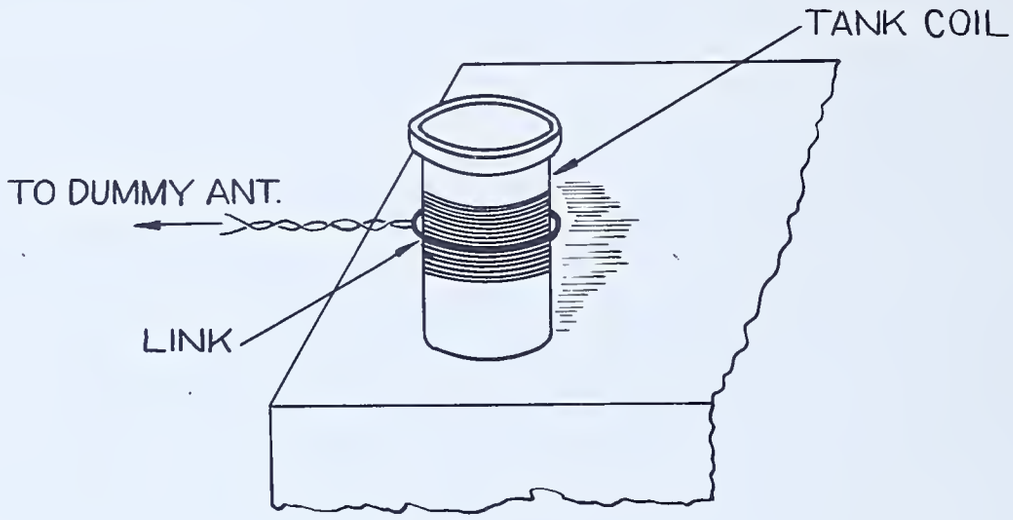

FIG.-10

METHOD OF COUPLING LINK TO TANK COIL

Theoretically, when the axes of the coils are parallel or coincide, (0°), the maximum transfer of energy is obtained. When the axes are perpendicular to each other (90°), there is no transfer. In general, transfer of energy decreases as the angle between the axes increases. The link coil L_2 is coupled to the dummy antenna by placing L_2 around the dummy antenna tank coil L in a manner similar to the way that the link coil L_1 is coupled to the plate tank coil. This couples the r-f voltage from the link to the dummy antenna circuit.

The dummy antenna circuit is tuned to resonance by placing the proper coil in the dummy circuit and adjusting the variable capacitor C to produce resonance at the frequency of the r-f voltage; this will be indicated by the lamp R_2 being lighted to maximum brilliancy. At resonance the reactance offered by the inductance L equals the reactance offered by the capacitor C; the limiting factor governing the flow of current in the dummy circuit will then be the resistance of the lamp The power expended in the dummy circuit results in heat and light being produced by the lamp R_2 and is equal to the resistance of the lamp times the square of the current flowing through the lamp ($P=I^2R$). A similar lamp R_1 which is lighted from the standard a-c source is used as a standard of brilliancy for lamp comparison and power measurement.

Adjustment of the Dummy Antenna

1. Place lamps R_1 and R_2 of proper power rating in their sockets.

   Note: Wattage rating of lamps R_1 and R_2 should be equal to the expected power output of the r-f source.

2. Light R_1 from 105-125 volt a-c source.

3. Place link coils L_1 and L_2 around their respective tank coils.

4. Tune the dummy antenna to resonance.

5. Re-tune plate tank circuit to resonance.

6. Adjust position of link coil L_1 with respect to tank coil to increase or decrease brilliancy of R_2 as needed.

7. Repeat Steps 4, 5, and 6 as often as necessary to obtain equal brilliancy of R_1 and R_2.

Since the two lamps R_1 and R_2 are of the same power rating in watts, the power supplied to the dummy antenna by the oscillator will be equal to that supplied to the lamp R_1. This affords a ready means of measuring the output of the oscillator or other generator of r-f energy.

THE HETERODYNE FREQUENCY METER

General Information:

The heterodyne frequency meter makes use of the "zero beat" method for determining frequency of a radio signal, and in the same manner it can be used to set a receiver to a predetermined frequency. It is, in a sense, a secondary standard of frequency capable of being varied over a reasonably wide band of frequencies and is calibrated for all points within this band to a reasonable degree of accuracy. The e.c.o. circuit is often used in the construction of a heterodyne frequency meter. The heterodyne frequency meter will produce a condition of zero beat with the harmonics of an r-f voltage as well as with the fundamental frequency. For this reason it is desirable to use an instrument such as the absorption frequency meter, to determine the order of harmonic (fundamental, second, third, fourth, etc.) to which it is tuned.

Heterodyning

In adjusting this instrument to zero beat the approximate frequency of the r-f voltage is found by means of an absorption frequency meter or similar device which will discriminate against harmonics in favor of the fundamental. The dial of the heterodyne frequency meter is then adjusted to this frequency or one of its harmonics. It will be noticed that as the dial is adjusted an audible tone will be heard in the headphones when the frequencies of the r-f voltages of the oscillator and heterodyne frequency meter coincide approximately. This tone will be heard as a very high-pitched whistle, lowering its pitch to zero cycles per second and then rising to a point beyond audibility as the setting of the dial passes across the frequency of the r-f voltage. The point at which the tone becomes zero cycles per second is known as "zero beat". At this point the dial setting of the heterodyne frequency meter will indicate the frequency of the r-f voltage or its harmonics.

For example, if a frequency of 11,000 kc. is to be measured and the dial is calibrated from 1000 to 2000 kc., the exact frequency may be found by obtaining zero beat with the 10th harmonic of 1100 kc. The error of measurement is greater as the order of harmonic increases, the greatest accuracy being obtained at the fundamental.

Calibration Shifting

The usefulness of this instrument depends mainly upon its ability to maintain its calibration over fairly long periods of time and its freedom from shifts in frequency due to such common causes as temperature variations, mechanical shocks, variation in power supply voltage, and load connected to its output terminals.

Calibration Points

Marker or reference points can be readily checked by obtaining zero beat with a 100 kc. sub-standard whose accuracy may be checked against standard frequency transmissions from the U.S. Bureau of Standards' Station WWV on 5000 kc.

Provisions for Frequency Stability

Frequency stability is improved by the use of temperature compensated capacitors in the oscillator tuned circuit and a high ratio of capacity to inductance. The placement of parts and the use of shielding to isolate the tuned circuit from heat generated by the tubes are of great help in attaining the high degree of stability; extremely rigid mounting of parts and good mechanical construction are also necessary in this respect. The use of a regulated power supply voltage eliminates the greater portion of frequency shift due to varying conditions of line voltages. Batteries may be used for the source of power. These afford good voltage regulation if replaced at regular intervals. Changing load conditions are isolated from the oscillator circuit by the use of an untuned amplifier stage between the oscillator and output terminal.

Communication Type Receiver as a Heterodyne Frequency Meter

A communication type of receiver may be used as a heterodyne frequency meter by setting it to receive continuous wave (cw) signals. The accuracy of calibration in general is poorer than that of a good heterodyne frequency meter. However, calibration points may be readily checked by tuning the receiver to stations whose frequencies are known.

Procedure:

A. Calibration of Heterodyne Frequency Meter, Fundamental Frequency Range (1000-2000 kc.)

1. Plug headphones into proper jack and the a-c cord into 105-125 volt a-c socket.

2. Allow unit to warm up for at least 30 minutes.

3. Connect the output of a 1000 kc. crystal calibrator to input terminals and set input control to half-on position.

4. Set main dial to 1000 kc.

5. Set the main dial to zero beat by means of the calibration trimmer.

6. Switch crystal calibrator to 100 kc. position.

7. Observe that a weaker signal will now be heard at the same (1000 kc.) dial setting, which is the tenth harmonic of 100 kc.

8. Rotate dial (slowly) toward the 2000 kc. end, and check zero beat settings for other harmonics at 100 kc. intervals. These signals will be quite weak.

9. Check against the calibration curve such intermediate points as are heard. The obtained readings should be the same as the calibrated values.

B. Frequency Checking of a Local R-F Voltage

1. Connect a five-foot length of wire to input terminal to provide signal pick-up from the source.

2. Advance input control to maximum.

3. Check approximate frequency of the voltage to be measured with the absorption frequency meter.

4. Set heterodyne frequency meter dial to zero beat with the fundamental or harmonic frequency of the voltage to be checked.

   Note: Adjust tuning dial slowly back and forth (rocking) to obtain exact zero beat.

5. Read value of frequency from dial or calibration curve.

   Note: If a harmonic is checked, this value must be multiplied by the proper order of harmonic to secure the frequency.

6. If frequency drift is indicated by a gradual shift from zero beat, reset to zero beat by readjusting frequency meter dial after a period of 30 seconds.

7. Read new frequency setting.

8. The difference between the readings obtained in Steps 5 and 7 indicates the frequency drift for a 30-second period.

9. Record the frequency drift.

CONSTRUCT AN ELECTRON-COUPLED OSCILLATOR

General Information:

An oscillator is a fundamental component of a modern radio receiver or transmitter. The electron-coupled oscillator is an oscillator which gives excellent results if constructed and adjusted with care.

In Part I of this job an e.c.o. with untuned output is constructed. oscillator is calibrated in terms of frequency vs. dial setting.

In Part II the e.c.o. is converted to provide a tuned output circuit. This circuit is tuned to the second harmonic of the fundamental frequency to provide output at 3,500 kc. when properly adjusted.

The chassis layout and wiring is designed so that the entire unit may be converted to a crystal controlled oscillator in Job 3 with a minimum of effort. For this reason some of the holes drilled and socket wiring connected in this job are not used until the next job.

Specifications:

1. Wind coils required for Parts I and II of this job according to specifications given in Fig. 13.

2. Construct (Part I) an electron-coupled oscillator with untuned output circuit according to the schematic diagrams provided (See Fig. 11).

3. Convert (Part II) the e.c.o. having untuned output circuit to one having a tuned output circuit to provide frequency doubling as in Fig. 14.

4. Perform tests and adjustments as directed in procedure.

Tools needed:

1. Soldering iron
2. Diagonal cutting pliers
3. Long nose pliers
4. Hand drill
5. Drills as needed
6. Screw driver
7. Socket punches

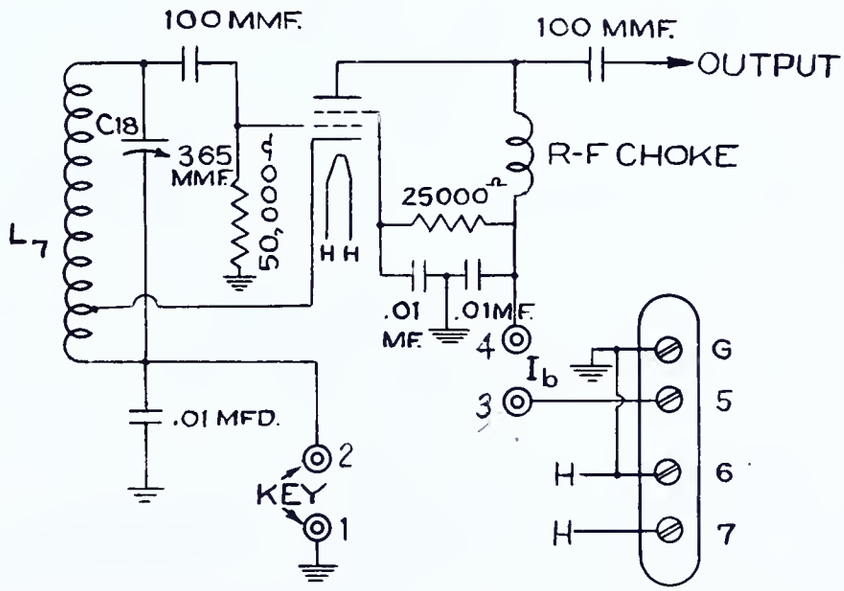

ELECTRON COUPLED OSCILLATOR
FIG.-11

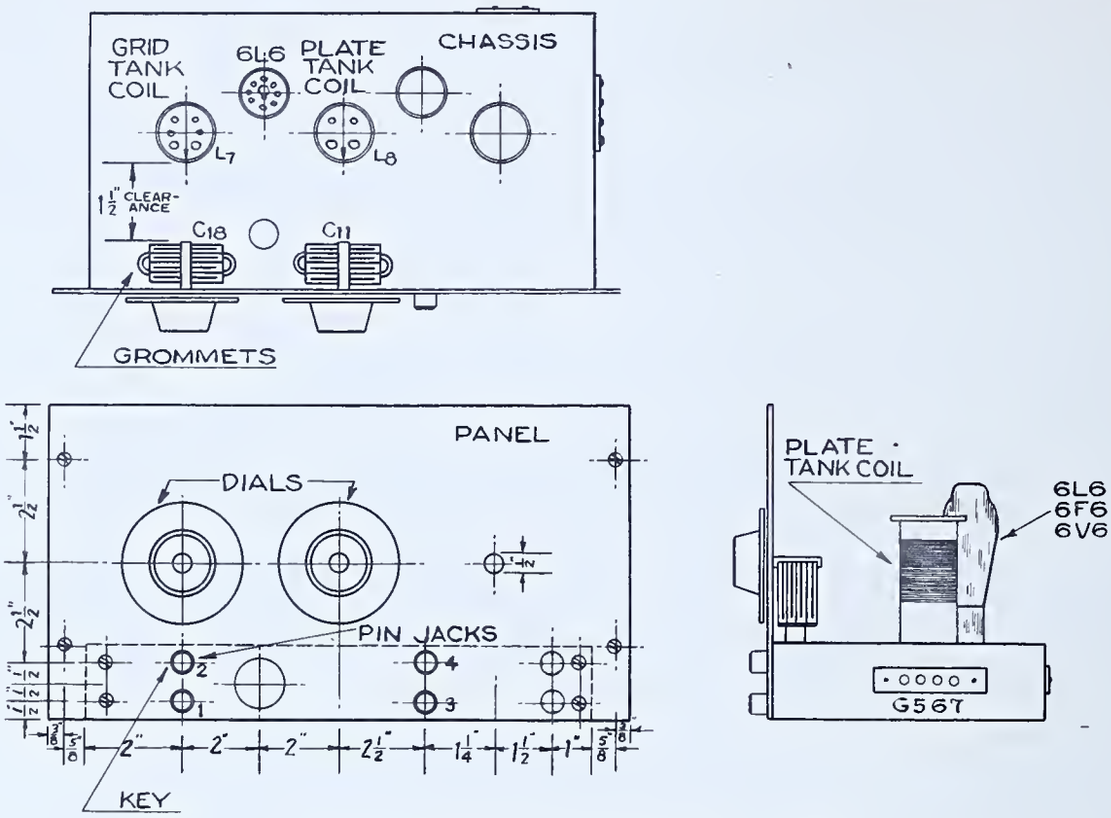

ELECTRON-COUPLED OSCILLATOR
SPECIFICATIONS

FIG.-12

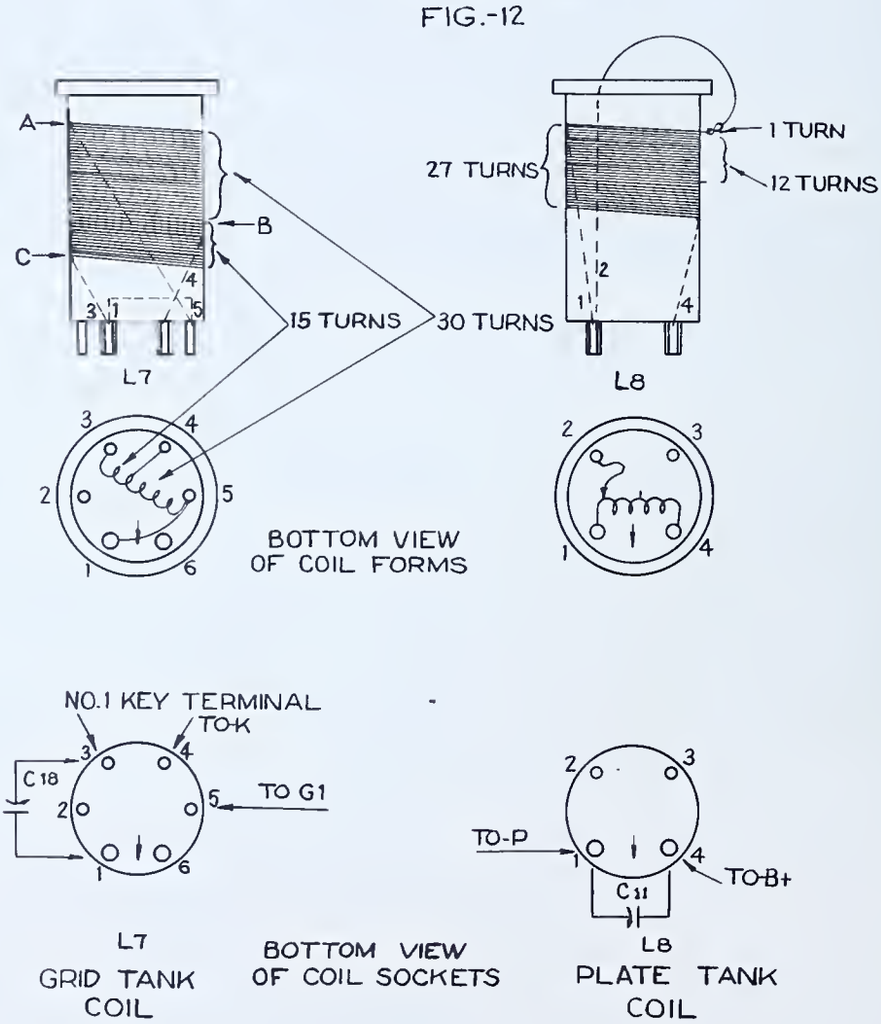

FIG.-13

Equipment needed:

1. 1- 0-100 ma. d-c milliammeter
2. 1- Power supply
3. 1- Telegraph key
4. 1- Dummy antenna
5. 1- Heterodyne frequency meter
6. 1- Absorption frequency meter
7. 1- Neon lamp, $\frac{1}{2}$ watt
8. 1- Multimeter

Materials needed:

1. 1- Chassis 7"x13"
2. 1- Panel 8"x15"
3. Rosin core solder
4. Magnet wire for coils, #24 B&S, D. C. C.
5. 12- Machine screws 3/8", 6-32 R. H.
6. 12- Hex nuts, 6-32
7. 2- 365 mmf. variable capacitors with mounting insulation and hardware
8. 1- $1\frac{1}{2}$" coil form (6 prongs)
9. 1- $1\frac{1}{2}$" coil form (4 prongs)
10. 2- Sockets for coil forms
11. 2- .0001 mfd. mica 1000 volt capacitors
12. 3- .01 mfd. 600 volt paper capacitors
13. 1- 50,000 ohm 1-watt resistor
14. 1- 25,000 ohm 1-watt resistor
15. 1- 2.5 mh. r-f choke, 125 ma.
16. 1- Octal socket
17. 1- 4-connection terminal strip
18. 1- 2-connection terminal strip
19. 2- Control knobs or dials
20. 1- 6L6, 6F6, 6K6 or 6V6 tube
21. 4- Pin jacks
22. Push-back wire, solid #18

Part I Construct an Electron-Coupled Oscillator with Untuned Output.

Procedures:

A. Wind Coils L_7 and L_8.

1. Obtain 6-prong coil form, wire, and necessary tools to wind grid tank coil L_7.

2. Wash and thoroughly dry hands before proceeding with coil winding. The appearance and efficiency of the coil is affected by dirt and moisture.

3. Lay out and drill coil form as instructed in specification sketch, Fig. 13. If coil is already drilled, use convenient holes.

4. Remove $\frac{1}{2}$" insulation from end of wire.

5. Insert end of wire through hole A at top of coil as shown in Fig. 13.

6. Place end of wire through #5 pin.

7. Place end of a piece of bare wire (about 4" long) through the same pin, and solder both wires in the pin. Clip off projecting ends of wire.

8. Push other end of the 4" piece of wire through pin #1 and solder.

9. Wind wire on coil form as follows:

   a. Hold form by its end in the left hand and the wire in the right hand.
   b. Rest coil form on knee.
   c. Wind form by turning it toward you, keeping tension on the wire held in the right hand. Be sure that the wire does not kink.
   d. Wind 30 turns of wire on the form, holding the wire securely in place as wound. Do not cut the wire.
   e. Measure, along the wire, 6 inches beyond the place of the 30th turn on the coil. Do not cut the wire.
   f. Bend this six-inch point back to the coil form so that the wire forms a three-inch loop. Crimp the end of the loop.
   g. Insert the crimped end through coil form at B.
   h. Remove the insulation at crimped end and place that end through pin #4.
   i. Solder wire to pin, and cut off projecting wire.
   j. Continue to wind coil in same direction for 15 more turns.
   k. Cut wire 3 inches beyond point of completing the last turn.
   l. Remove $1\frac{1}{2}$ inches of insulation.
   m. Insert wire through form at C, and through pin #3.
   n. Solder wire to pin.

10. Wind plate tank coil L_8 according to specifications of Fig. 13.

B. <u>Construct E.C.O.</u>

1. Test all parts for continuity.

2. Make a wiring diagram from schematic, Fig. 11, and have it approved by the instructor.

3. Drill chassis to mount parts as indicated by chassis layout, Fig. 12.

4. Assemble parts as indicated in Fig. 12. Insulate variable capacitors from chassis with rubber grommets or fiber washers.

5. Test insulation between variable capacitors and chassis with an ohmmeter to make certain they are insulated from the chassis.

6. Wire e.c.o. according to wiring and schematic diagrams.

7. Make resistance analysis according to tabulation form 3 on Question Sheet. Record results in notebook.

8. Have instructor check job for correct wiring and quality of workmanship.

C. Operation

Caution: Observe the following safety precautions while operating the e.c.o.:

(1) Be careful that your body does not come in contact with parts of the circuit carrying r-f voltage; r-f burns, which are slow to heal, will result from such contact.

(2) In making voltage measurements be careful that your body does not complete a path for the high voltage direct current to ground. Electric shock will result if this is ignored.

(3) In order to avoid possible electric shock, make voltage measurement with one hand, keeping the other behind your back or in your pocket. Hold the positive test lead by the insulated portion of the test prod.

(4) Always turn off the power supply before making wiring changes or mechanical repairs.

1. Connect the power supply, milliammeter, and key to the e.c.o.

2. Plug the tube and coil L_7 into proper sockets.

3. Connect power supply to a 105-125 volt a-c line.

4. Determine maximum plate current for 6L6 from a tube manual.

5. Turn on power switch.

6. Close key and observe plate current.

   Note: If there is excessive plate current when the key is closed, the oscillator is not oscillating. Watch the plate current very carefully. Turn off the power immediately and re-check the entire circuit if such a condition exists.

7. Check for r-f voltage by holding a neon bulb at the top end of the tank coil while the tuning capacitor is rotated from maximum to minimum capacity while key is closed. See Reference D.

8. Check frequency with absorption frequency meter, and record in notebook the frequency at every 10 divisions on the tuning dial. Refer to tabulation form 1 on Question Sheet.

9. Tune the signal on a heterodyne frequency meter, and check the signal for frequency stability and presence of carrier hum. See Reference H. Record results of frequency stability check on copy of tabulation form 4 on Question Sheet.

10. Plot a graph of results obtained in Step 8, tuning dial vs. frequency. Use the horizontal lines of the graph for the dial setting.

Part II - Convert E. C. O. Having Untuned Output Circuit to One with a Tuned Output Circuit to Provide Frequency Doubling.

Procedures:

A. Construction of Frequency Doubler Circuit

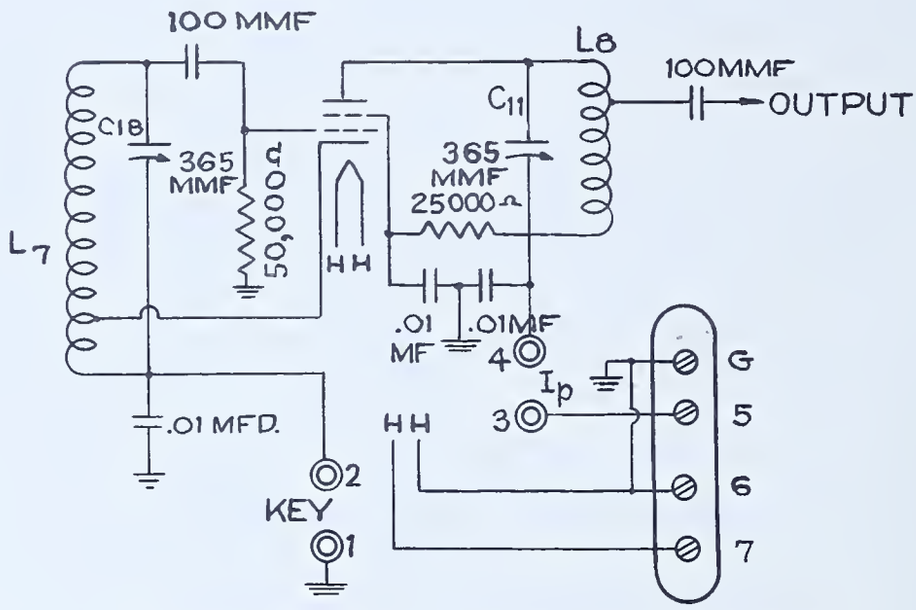

FREQUENCY DOUBLER CIRCUIT
FIG.- 14

1. Make necessary changes in the plate tank circuit as indicated by schematic, Fig. 14.

2. Have wiring checked by instructor.

3. Make resistance analysis as shown in tabulation form 5 on Question Sheet.

B. Operation

1. Connect the power supply, milliammeter, and key to the e.c.

2. Plug the tube and coils into proper sockets.

3. Connect power supply to 105-125 volt a-c line.

4. Turn on power switch.

5. Close key and observe plate current.

Caution: Watch plate current very carefully. If plate current is excessive, open key and check the wiring.

6. Tune plate tank capacitor to resonance at the second harmonic while the key is closed. This will be indicated at the point of maximum dip in the meter reading.

   Note: Be sure to retune the plate tank capacitor every time the grid tank capacitor is changed.

7. Record the current reading at resonance on a copy of form 2.

8. Measure the plate supply voltage at the power supply and record in notebook on the copy of form 2.

9. Check for r-f voltage with a neon bulb held at the top end of the plate tank coil.

10. Check frequency with a frequency meter. Plot a graph, plate capacitor dial setting vs. frequency. Take readings every 10 points on the dial. Record on a new copy of form 1.

11. Tune the output signal on a heterodyne frequency meter, and check the note for frequency stability and presence of carrier hum. See Reference H. Record results of frequency stability check on copy of form 1.

12. Calculate plate power input ($E_p \times I_p$), and record in notebook on the copy of tabulation form 2 made for Step 7.

13. Connect a dummy load as in Reference G, and again measure the plate current and voltage and record in the copy of form 2.

14. Calculate input power with dummy load (Step 13), and compare to the input power with no load (Step 12).

QUESTIONS

Place the answers to these questions in your notebook or on form as directed by instructor.

1. How is the frequency of an e.c.o. varied?
2. What circuit elements may determine the frequency of an oscillator?
3. How is feed-back coupling provided in the e.c.o.? How is the oscillator coupled to the output circuit in the e.c.o.?
4. Give several uses for the e.c.o.
5. What are some advantages of the e.c.o.?
6. What are some disadvantages of the e.c.o.?
7. Explain one method of producing oscillations.
8. How does the frequency stability of the e.c.o. compare with that of the ordinary oscillator? Why?
9. How may stable operation of the oscillator be determined?
10. Explain the relationship between harmonics and fundamental frequencies.
11. What is meant by class C operation?
12. How is the grid bias developed in the e.c.o.?
13. What ratio of grid bias to cut-off bias is desirable for class C operation of an oscillator?
14. How may an oscillator be operated at full load and yet produce a minimum of interference to radio receivers?
15. How may the frequency stability of the e.c.o. be determined?
16. What degree of coupling should be used when determining frequency stability?
17. What is meant by high C ratio?
18. For what particular circuit was a high C ratio selected?
19. State three methods of indicating the presence of r-f current.
20. State three methods of indicating the presence of r-f voltage.
21. How may the amount of r-f power output be determined?
22. What is the principle of operation of a thermogalvanometer?
23. Describe the method of using a neon tube for r-f measurements.
24. What is one advantage of the vacuum tube voltmeter?
25. Why is the probe-type head used in the vacuum tube voltmeter for r-f measurements?
26. What precaution should be observed in connecting test equipment to r-f sources?
27. What is the principle of the hot wire ammeter?
28. Incandescent lamps are used for what r-f indications? Give the procedure for each use.
29. What are the components of a dummy antenna?
30. What special construction is required for the oscillator used in a heterodyne frequency meter?
31. How may the calibration of a frequency meter be checked?
32. Name two methods of connecting the oscillator to a load.
33. How did the dummy antenna affect the tuning of the plate circuit?
34. Which circuit gives the greatest harmonic output, the untuned (Fig. 11) or the tuned (Fig. 14)? Why?
35. What is the purpose of making a resistance check before applying voltage to the e.c.o.?
36. Explain the method of tuning the heterodyne frequency meter to zero beat.
37. Why is the absorption type frequency meter used in addition to the heterodyne frequency meter for checking the fundamental frequency?

38. How is the exact resonance setting of the plate tank tuning capacitor indicated?
39. How is the input to the dummy antenna adjusted?
40. From your observations of data recorded on form 2, what is the effect of loading the oscillator?
41. What adjustment was required in the plate tank circuit when the load was coupled to it?
42. What are the factors causing frequency drift?
43. What frequency drift was evident in the e.c.o. constructed in Part I of this job?
44. Compare the frequency drift of the e.c.o. with untuned output circuit (Part I) to the e.c.o. having tuned output circuit (Part II). Give reasons for any differences.

References:

Everitt, W. L. et al., Fundamentals of Radio, pp. 105-110, 202-204.
Henney, K., Principles of Radio (Fourth Edition), pp. 134-135, 142-181.
The Radio Amateur's Handbook (any Edition), A. R. R. L. Chapters on Transmitter Design, Measurements and Measuring Equipment, and Antenna Construction.
The Radio Handbook (any Edition), Editors and Engineers, Chapters on Transmitter Theory, Test and Measuring Equipment, Antenna Theory and Operation, and Radio Mathematics and Calculations.

COPY THESE TABULATION FORMS IN NOTEBOOK

FREQUENCY CHECK- Step 8 of Operation, Part I
Step 10 of Operation, Part II

FORM 1

DIAL SETTING	FREQUENCY - KC
0	
10	
20	
30	
40	
50	
60	
70	
80	
90	
100	

CALCULATION OF PLATE POWER INPUT
Steps 7,8,12,13 and 14 of Part II-B

FORM 2

$E_p \times I_p = P$		
E_p	I_p	P

RESISTANCE ANALYSIS - Step 7 of Construction, Part I-B

FORM 3

Points Measured (coil and tube removed)		Resistance in Ohms
From	To	
Grid	Chassis	
Screen grid	Chassis	
Plate	Chassis	
Cathode	Chassis	
G terminal connection	Chassis	
5 terminal connection	Chassis	
6 terminal connection	Chassis	
7 terminal connection	Chassis	
Coil L_7 socket connection #1	Chassis	
Coil L_7 socket connection #3	Chassis	
Coil L_7 socket connection #5	Chassis	
Pin jack #1	Chassis	
Pin jack #2	Chassis	
Pin jack #3	Chassis	
Pin jack #4	Chassis	
Screen grid	Pin jack #3	
Plate	Pin jack #3	
Screen grid	Pin jack #4	
Plate	Pin jack #4	
Plate	Screen grid	
Plate	Grid	

FREQUENCY STABILITY CHECK - Step 9 of Operation, Part I-C
11 of Operation, Part II-B

FORM 4

	Initial Frequency	Final Frequency	Time Elapsed In Minutes	Frequency Change per Minute	Frequency Incre and Decreasi
Untuned output					
Tuned output					

RESISTANCE ANALYSIS - Step 3 of Construction, Part II-A

FORM 5

Points Measured (with coils and tube removed)		Resistance in Ohms
From	To	
L_8 Coil socket connection #1	Chassis	
L_8 Coil socket connection #4	Chassis	
L_8 Coil socket connection #4	Pin jack #4	

UNIT 3

THE CRYSTAL-CONTROLLED OSCILLATOR

Reference I — The Crystal-Controlled Oscillator. Page 48

JOB SHEET 3 — CONSTRUCT A CRYSTAL-CONTROLLED OSCILLATOR. Page 52

THE CRYSTAL-CONTROLLED OSCILLATOR

General Information:

Crystal-controlled oscillators are used where the frequency of a generated r-f voltage must be held close to a desired value. Their most common application is in the radio transmitter; other applications include frequency standards and timing devices. In such oscillators the crystal plate is connected to the control grid circuit of a vacuum tube in place of the usual LC tuned circuit. The piezo-electric properties and cut of the crystal control the rate at which the oscillations will occur in this circuit, hence the name "crystal-controlled" oscillator. The plate current changes occurring in the plate circuit take place at the same rate as the crystal vibrations, or an integral multiple of the same rate. This provides an excellent means of controlling the frequency of the r-f output from the circuit.

Crystal Mountings

The quartz plate must be mounted in a holder in order that connections can be made to the circuit. The mounting in its simplest form consists of two perfectly flat plates, usually brass, between which the crystal is placed, the assembly being held together with a spring or by the weight of the electrode itself. However, this type of mounting is not suited to commercial use since particles of dirt and vibration due to movement of the equipment would cause unreliable operation.

FIG. 1

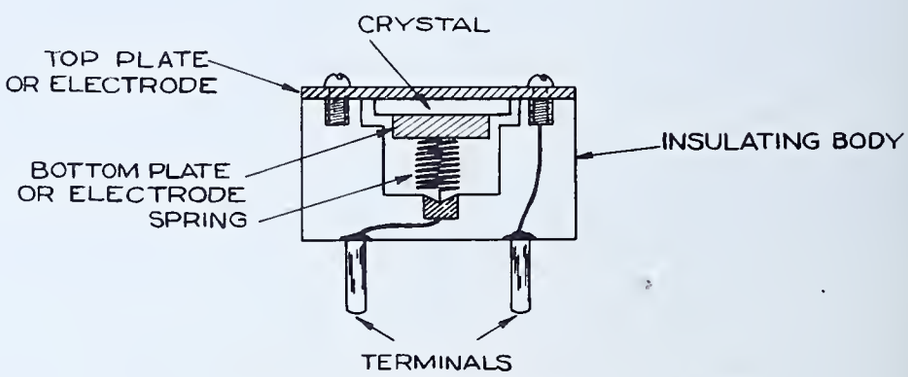

SECTION VIEW OF CRYSTAL HOLDER
FIG.-2

Commercial type holders which are dust-proof and provide permanent contact under severe operating conditions are shown in Figs. 1 and 2. In this type holder, connection to the quartz plate is made by means of two electrodes usually made of brass. These are perfectly flat and are held in contact with the quartz plate by means of a light spring. The spring method is generally used, since it permits handling and mobile operation of the unit without distrubing the plate. Caution must be taken, however, to insure free vibration of the plate by keeping the spring tension as light as possible consistent with good contact.

Frequency variations due to outer temperature changes may be controlled by maintaining the operating temperature of the crystal at a constant value by artificial means. The frequency calibration of the crystal is made for an operating temperature greater than normal room temperature. The crystal so calibrated is placed in a thermostatically controlled chamber (Fig. 3) wherein the operating temperature determined during calibration is maintained by a heating element. In this manner the frequency of the crystal can be held constant over a wide variation of external temperatures.

FIG. 3

Crystal-Oscillator Circuit

Inspection of the circuit diagram (Fig. 4) shows a simple electron-coupled oscillator converted to a crystal-controlled oscillator. This is done by using a crystal in place of the LC elements in the grid circuit to control the frequency of oscillation. Variations of this circuit may be made by changing tube and circuit design; these will depend upon the particular application of the oscillator.

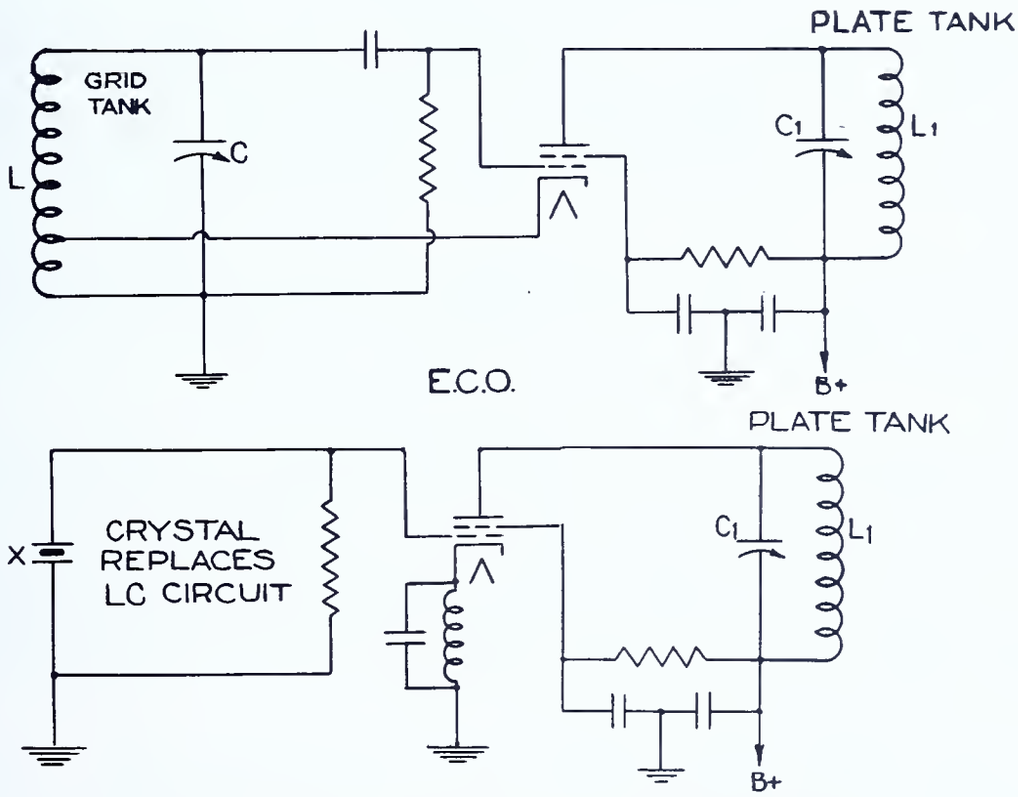

CRYSTAL CONTROLLED OSCILLATOR

FIG.-4

CONVERSION FROM ECO TO CRYSTAL CONTROL.

Operation

To place the oscillator in operation, connect a 100 ma. d-c instrumen in the B+ lead to the plate circuit to measure the plate current. See Fig. 6. Then connect the power supply to furnish the proper voltages for plate, screen grid, and heater supply.

For general operation, the crystal oscillator is supplied with 250 to 400 d-c volts for the plate circuit and 150 to 180 d-c volts for the screen grid circuit. After the tube has heated, the plate current will rise to approximately 50 ma. for tubes of the 6V6 or 6L6 class.

Tuning Adjustment

The plate tank circuit should be adjusted to resonance at the crystal frequency. In making this adjustment the tuning capacitor should be set slightly to the low capacity side of resonance to assure ready starting of oscillations. This is necessary to overcome the effects of loading on the plate tank circuit. This procedure is often helpful in reducing crystal current to a safe value. Oscillation at resonance will cause the plate current indication to fall to a value of 12 to 15 ma., due to a decrease in circuit losses.

The approximate value of the crystal current is indicated by the amount of light from a 60 ma. indicator lamp inserted in series with the crystal. See Fig. 6. Since the safe upper limit of r-f crystal current is approximately 60 to 100 ma., excessive crystal current will be indicated by abnormal brilliancy or burn-out of this indicator lamp.

It will be noted that the "dip" in plate current in an oscillator designed for fundamental output frequencies should occur at just one point of tuning. This is because oscillation occurs only at the natural frequency of the crystal.

When the plate tank circuit is tuned to resonance, the oscillator may then be loaded by coupling to some form of load circuit, such as the dummy antenna (see Reference G); and the plate current will then rise to a higher value than when the oscillator is not loaded. When adjustments to produce oscillation are made, spurious frequencies may occur which are a result of imperfectly ground crystals. These may be detected by noting erratic operation of the plate milliammeter or by indications in a heterodyne frequency meter. See Reference H.

To provide output at harmonics of the fundamental crystal frequency, dual purpose circuits, such as the tri-tet, may be employed to provide output voltages, the frequency of which is in harmonic relation to that of the crystal.

In the tri-tet (Fig. 5) the control grid, cathode, and screen grid act as a triode crystal oscillator.

The electron stream, which is common to these elements as well as to the plate of the tube, is modulated by the fundamental frequency and its harmonics. The harmonics may be selected and reenforced by tuning the plate circuit to the desired harmonic of the crystal frequency, thereby providing a convenient means for obtaining r-f output at some small whole number multiple of the crystal frequency.

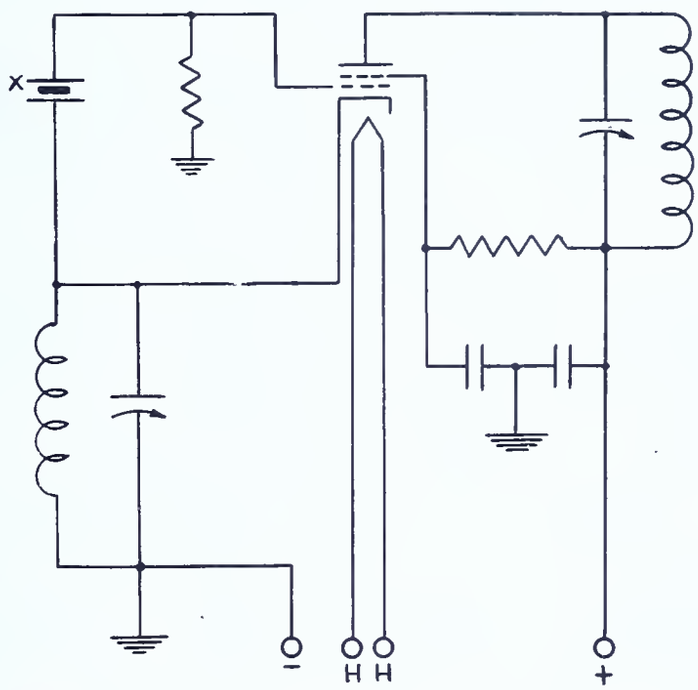

TRI-TET OSCILLATOR CIRCUIT
FIG.- 5

CONSTRUCT A CRYSTAL-CONTROLLED OSCILLATOR

General Information:

The electron-coupled oscillator constructed in Job 2 is converted in this job to a tri-tet crystal-controlled oscillator. Testing procedures are given to provide observation of operating characteristics at fundamental and second harmonic output frequencies.

Specifications:

1. Convert the electron-coupled oscillator constructed in Job 2, Part II, to a tri-tet crystal oscillator. Fig. 6.

2. Remove wire from coil forms used in Job 2 and rewind, according to specifications (Fig. 7) for L_6 and L_8. L_9 will not be wound until Step 1, Procedure C, and will utilize the form of L_8.

   Note: It may be desired to keep the coils used in Job 2 intact. In that case two similar coil forms will be required for use in this job.

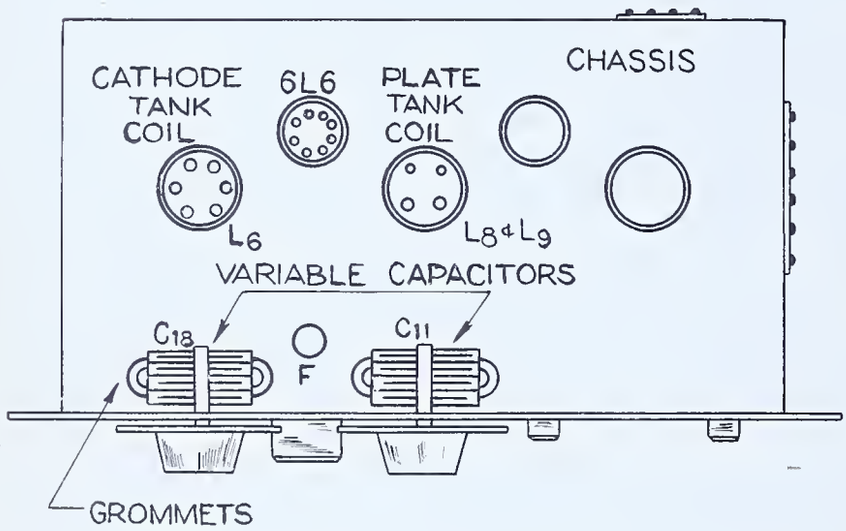

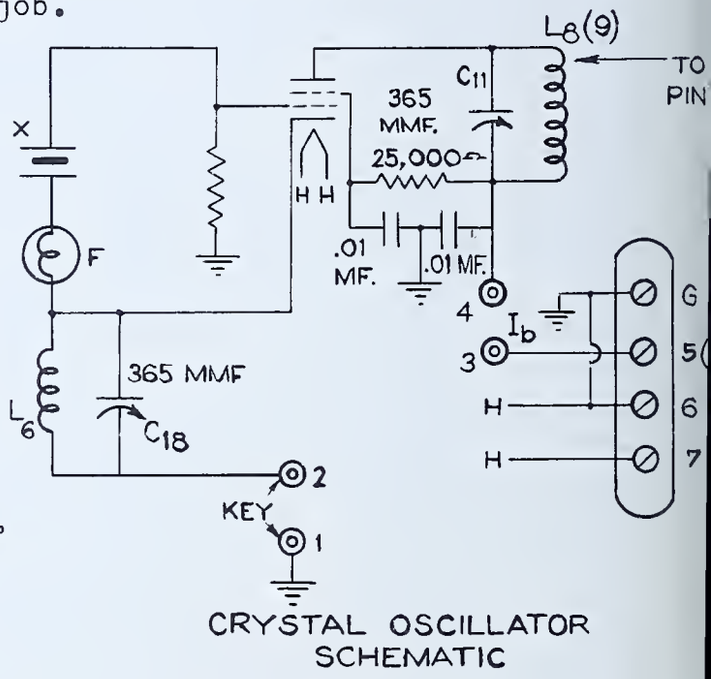

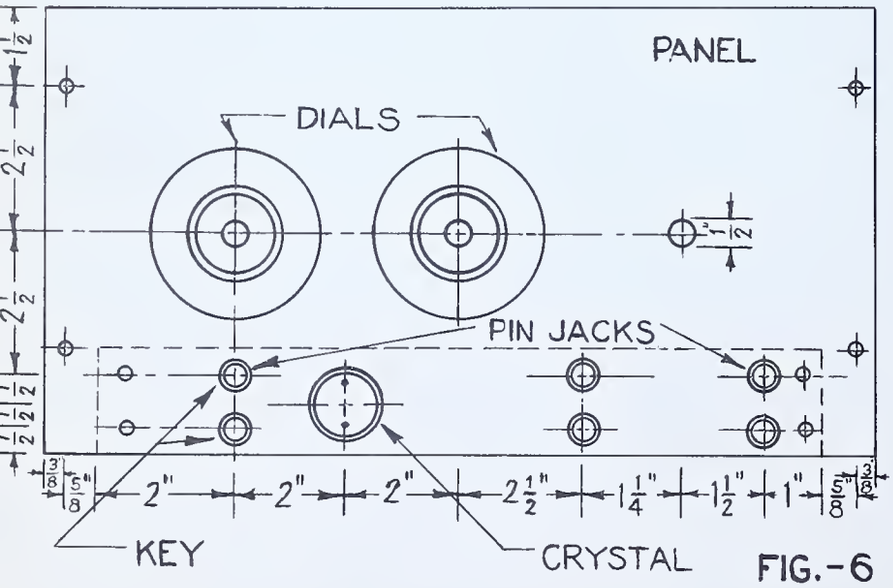

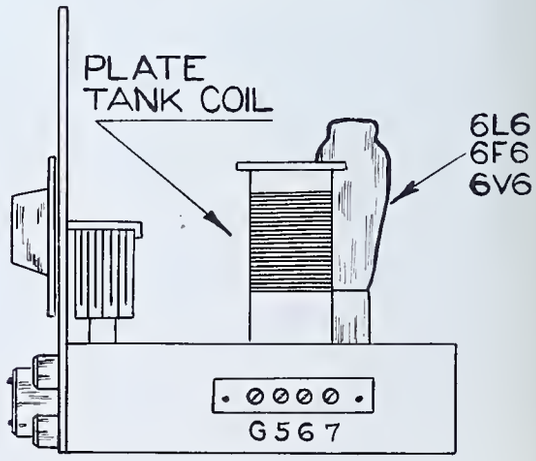

FIG.-6

Coil Specifications:

1. L_6 cathode coil - 20 turns, #24 D. C. C.; winding length, 1"; diameter: $1\frac{1}{2}$"; six-prong plug-in coil form.

2. L_8 plate tank coil - for the fundamental frequency: 27 turns, #24 D. C. C.; winding length: 1"; diameter: $1\frac{1}{2}$"; four-prong plug-in coil form. Coil tapped at first and 14th turns from the top.

3. L_9 plate tank coil - for second harmonic; 15 turns, #24 D. C. C.; winding length: 1"; diameter: $1\frac{1}{2}$"; four-prong plug-in form. Coil tapped at first and 7th turns from the top.

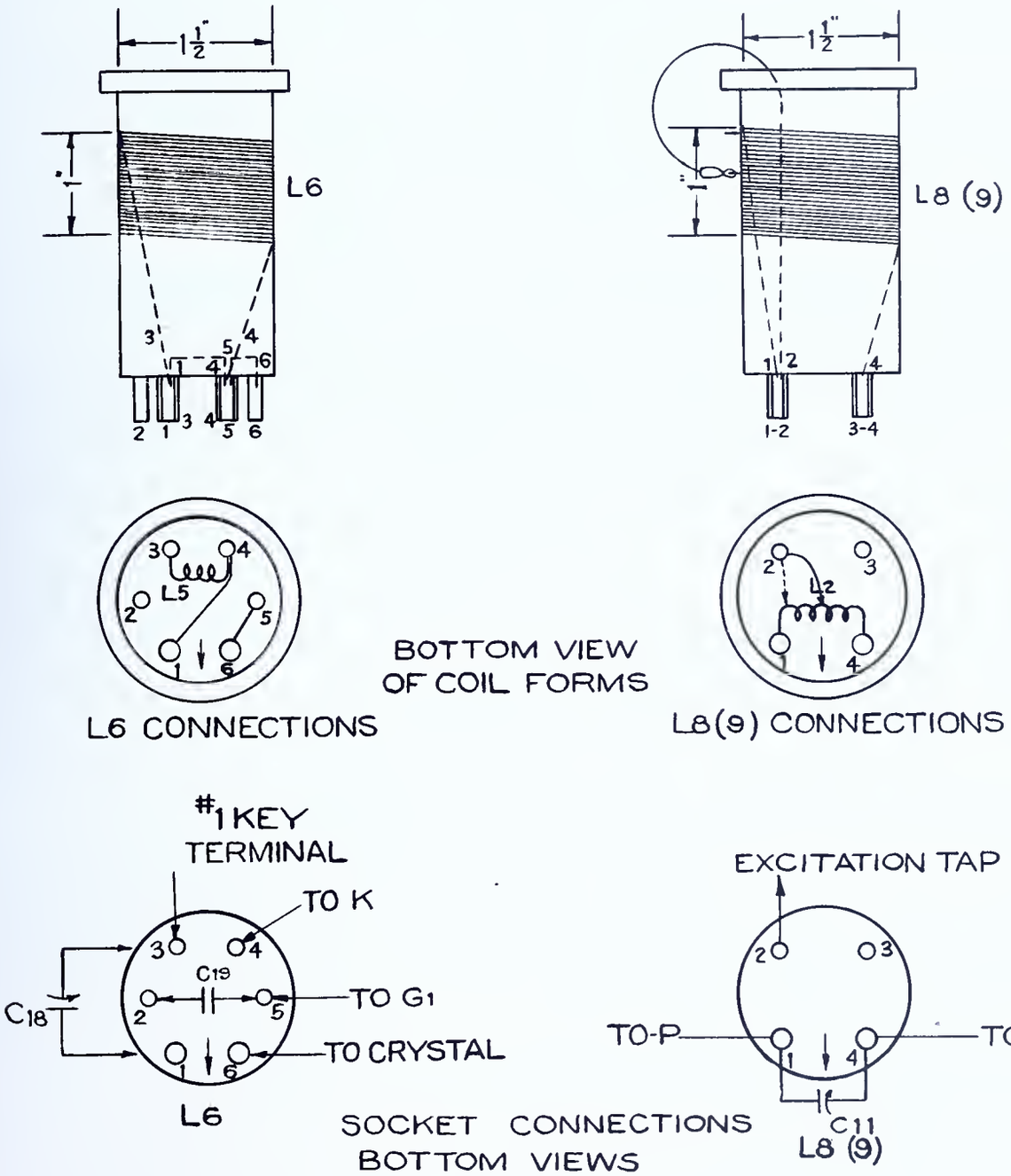

FIG.-7

Materials needed:

1. 1- Electron-coupled oscillator unit used in Job 2
2. 1- 5-prong socket (for crystal)
3. 2- ½" #6-32 R. H. brass machine screws and nuts
4. 1- 60 ma. indicator lamp and socket assembly
5. 25 ft. #24 D. C. C. wire
6. 5 ft. #18 solid push-back wire

Equipment needed:

1. 1- 0-100 ma. d-c milliammeter
2. 1- Neon lamp, ½ watt
3. 1- Absorption frequency meter
4. 1- Heterodyne frequency meter
5. 1- Vacuum tube voltmeter, for r-f measurements
6. 1- Dummy antenna equipped with a 10-watt lamp
7. 1- 0-500v d-c voltmeter
8. 1- Ohmmeter
9. 1- Power supply, 150-300 volts, d-c, 100 ma.
10. 1- Cathode ray oscillograph
11. 1- Telegraph key
12. 1- 6L6, 6F6 or 6V6 tube (metal or glass)
13. 1- Mounted quartz crystal (approximately 3500 kc.)
    Note: Crystals of other frequencies may be used if coil dimensions are altered.
14. Necessary test leads
15. 1- 5000 ohm 10-watt variable resistor

Tools needed:

1. Soldering equipment
2. Long nose pliers
3. Diagonal cutting pliers
4. Screw driver

Procedures:

A. Conversion

1. Make chassis layout and wiring diagram of necessary changes in wiring.

2. Have wiring diagram checked by instructor.

3. Mount necessary parts on chassis.

4. Make wiring changes as required. See Fig. 6. This will connect the crystal and the 60 ma. indicator lamp (F) into the grid circuit.

   Note: In Job 2 the wiring for the socket L_7 was such that the insertion of coil L_6 into that socket in this job will place coil L_6 and capacitor C_{18} in the cathode circuit.

5. Wind coils L_6 and L_8 for fundamental frequency according to specification. Make taps on coil L_8 as follows:

   a. Wind the coil as far as the location of the tap. (The required number of full turns from the starting point at the top of the coil.)

   b. Starting at the location of the tap, remove, beyond that point, approximately 3/4" of insulation.

   c. Form a small loop with the bared wire and twist this loop together with two or three turns.

   d. Solder the twisted portion of the loop. This is to prevent the loop from being pulled out.

   e. Continue to wind the coil, repeating the above procedure for any required similar taps.

6. Check coils for continuity and proper termination of windings.

7. Make a point to point resistance check of complete wiring job.

8. Have instructor inspect work for neatness and correctness.

B. Testing Operation at the Fundamental Frequency

Caution: Observe the following safety precautions while making test:

(1) Be careful that your body does not come in contact with parts of the circuit carrying r-f voltage; r-f burns, which are slow to heal, will result from such contact.

(2) In making voltage measurements, be careful that your body does not complete a path for the high voltage direct current to ground; this will cause serious electric shock.

(3) Make voltage measurement with one hand, keeping the other behind your back or in your pocket in order to avoid possible electric shock. Hold the positive test lead by the insulated portion of the test prod.

(4) Always turn off the power supply before making wiring changes or mechanical repairs.

1. Connect leads from power supply to oscillator terminal strip.

2. Insert coils L_6 and L_8, the tube, and the crystal in their respective sockets.

3. Connect milliammeter to jacks (3-4) and key to (1-2).

4. Turn on switch of power supply and allow oscillator tube to heat.

5. Close plate voltage switch of power supply.

6. Observe rise in plate current (I_p) when key is momentarily closed (40-60 ma. normal). If milliammeter goes "off scale", turn off power supply and check oscillator wiring for short circuit.

7. Close key and record value of plate current (I_p) on copy of form 1. Measure and record value of plate voltage (E_p) from B+ to chassis, while key is closed.

8. Adjust capacitor C_{11} and C_{18} to give the greatest decrease in plate current reading; this indicates oscillation.

9. Record on copy of form 1 the lowest value of plate current (I_p) and plate voltage (E_p) at the point of oscillation.

10. Close key and check plate tank circuit C_{11}, L_8, and cathode tank circuits (L_6, C_{18}) for points of maximum and minimum r-f voltage, using a neon lamp or test lamp and loop as an indicator. Record these points on schematic diagram by check marks (✓). See Reference D on "R-F Voltage Indicators" and Reference F on "R-F Power Indicators".

11. Measure the frequency of the generated r-f voltage, using an absorption frequency meter. Record indicated value on copy of form 2 on Question Sheet.

12. Tune in the generated signal on the heterodyne frequency meter; adjust heterodyne note to zero beat. See Reference H, "Heterodyne Frequency Meter".

13. Compare frequency reading determined in Step 12 with the indicated frequency of the crystal. Consult instructor if there is a variation greater than the tolerance for the crystal.

14. Open and close the key and observe whether the signal heard is a single unwavering note. Note change in frequency as adjustment of plate tank capacitor is varied slightly.

15. Close key and adjust frequency meter to exact zero beat. Note any drift from this setting over a period of several minutes. Record whether drift is positive or negative on copy of form 3 on Question Sheet.

16. Couple the dummy load to oscillator plate tank circuit. See Reference G, "The Dummy Antenna".

17. Adjust capacitors of dummy load and plate tank circuit for resonance.

18. Adjust coupling link for proper energy transfer.

19. Vary the coupling to the dummy antenna and observe increase and decrease of power absorbed by the dummy antenna as indicated by changes in brilliancy of the lamp.

20. Observe any changes in value of r-f crystal current as dummy antenna power is varied.

21. Calculate value of plate power input ($E_p \times I_p$) for the three values of dummy antenna power indicated on form 4 on Question Sheet. Copy this form in notebook and record power input values.

22. Connect a 5000 ohm, 10-watt variable resistor in series with B+ lead between power supply and oscillator.

23. Vary resistor to change plate voltage in 50 volt steps between 100 and 300 volts, observing changes in power input and output.

24. Connect vacuum tube voltmeter to the plate tank circuit to measure r-f voltage (oscillograph may be used in place of V.T.V.M.). See Reference D, "R-F Voltage Measurement".

25. Measure and record values of r-f voltage appearing across the coil for the several values of d-c plate voltage given in form 5. Copy and record in notebook.

26. Observe values of r-f voltage appearing across the plate tank coil for several settings of the plate tank capacitor.

27. Connect oscillograph as shown in Reference D and observe deflection resulting from several values of plate voltage and tank capacitor setting. Record sketch of one pattern on a circle form similar to form 6.

C. Testing Operation at the Second Harmonic Frequency

1. Wind coil L_9 for frequency doubling (thus obtaining the second harmonic) according to coil winding specifications. See Fig. 7.

2. Insert this coil in oscillator in place of L_8.

3. Repeat Steps 4 to 15 of Procedure B. C_{18} is adjusted for minimum plate current. Note that the adjustment of C_{18} is now more critical than before.

4. Disconnect the wiring between equipment and store the oscillator for use in Job 4.

QUESTIONS

Place the answers to these questions in your notebook or on form as directed by instructor.

1. What is meant by piezo-electric properties of a crystal?
2. What factors about the crystal determine its frequency of oscillation?
3. What types of crystal mountings may be used? What are their advantages or disadvantages?
4. What is the purpose of the quartz crystal in a radio transmitter?
5. What are the normal operating current and voltage values for the crystal oscillator plate circuit when using a 6L6 or 6V6 tube?
6. What are the possible effects of high crystal current?
7. Outline steps for the reduction of crystal current.
8. What is the purpose of the lamp in the crystal circuit?
9. How does piezo-electric control differ from self-excited control?
10. What would cause low r-f output power from the crystal oscillator?
11. What is meant by frequency drift?
12. What could cause oscillation to occur at several closely related frequencies with the same crystal?
13. What effect would a change in temperature of the crystal have on the frequency of the generated r-f voltage? What is done to prevent such a temperature change?
14. What would happen if the crystal current should burn out the lamp in the crystal circuit?
15. How could the crystal oscillator be used to supply an output frequency which has a value of:
    (a) Double that of the crystal frequency?
    (b) Triple that of the crystal frequency?
16. What instruments could be used to measure the r-f output voltage?
17. Show by means of a schematic diagram how the e.c.o. can be converted to crystal control.
18. Why is the plate tank capacitor tuned to the low capacity side of resonance?
19. What are the effects on the tuning of the plate tank circuit when the dummy load is coupled to it?
20. Why does the plate current fall to a low value when the plate tank circuit is tuned to resonance?
21. How may a condition of oscillation be determined?
22. How do the values of plate current and plate voltage compare when the oscillator is operated on the fundamental frequency and as a frequency doubler?
23. What is the purpose of the tuned cathode circuit in the tri-tet crystal oscillator?
24. Why did the r-f voltage output change as the plate voltage was changed?
25. Compare the operating characteristics of the crystal controlled oscillator to those of the electron-coupled oscillator.

References:

Everitt, W. L. et al., Fundamentals of Radio, pp. 288-290.
Henney, K., Principles of Radio (Fourth Edition), pp. 482-484.
The Radio Amateur's Handbook (Any Edition), A. R. R. L., Chapters on Transmitter Design and Transmitter Adjustment.
The Radio Handbook (Any Edition), Editors and Engineers, Chapter on Transmitter Theory.

TABULATION FORMS

FORM 1 METER READINGS - Steps 7 and 9 of Procedure B

	Part B Step 7 Fundamental Non-oscillating	Part B Step 9 Fundamental Oscillating	Part C Step 7 Doubling Non-oscillating	Part C Step 9 Doubling Oscillating
Plate Current I_p				
Plate Voltage E_p				

FORM 2 FREQUENCY MEASUREMENT - Step 11 of Procedure B

	Step 11 Fundamental	Step 11 Doubling
Frequency		

FORM 3 FREQUENCY DRIFT CHECK - Step 15 of Procedure B

	Step 15 Fundamental	Step 15 Doubling
Drift		

FORM 4 POWER INPUT - (E_p x I_p) - Step 21 of Procedure B

Dummy Brilliancy	Dim	Normal	Greater Than Normal
Power Input (Watts)			

FORM 5 R-F VOLTAGE - Step 25 of Procedure B

D-C Plate Volts	150v	200v	300v
R-F Voltage			

FORM 6 OSCILLOGRAPH PATTERN

Step 27 of Procedure B

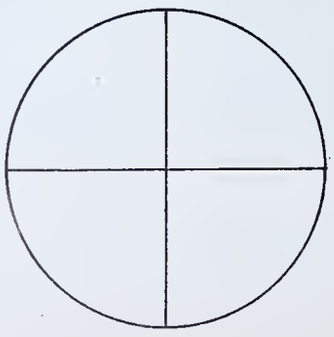

UNIT 4

THE R-F POWER AMPLIFIER

Reference J — The R-F Power Amplifier. Page 62

Reference K — How to Convert a Simple Power Supply to one which will provide Bias Voltages. Page 70

JOB SHEET 4 — CONSTRUCT AN R-F POWER AMPLIFIER. Page 71

Part I — Construct an R-F Power Amplifier to Act as a Frequency Doubler. Page 71

Part II — Construct an R-F Power Amplifier to Act as a Class C Final Amplifier. Page 76

THE R-F POWER AMPLIFIER

General Information:

In a transmitter one or more stages of r-f power amplification usually follow the oscillator stage to provide sufficient power to the antenna system for reliable communication. The oscillator or exciter power output is not large enough to do this. In addition the frequency stability of the oscillator may be seriously affected by changes in loading when it is connected directly to the antenna. Such changes in loading are caused by: (1) variations in antenna position due to wind, and (2) characteristics due to atmospheric conditions.

Note: Loading refers to the circuits or devices that absorb or dissipate the power output of a stage. In a transmitter the load is the antenna system and its coupling network.

The amplifier stages effectively isolate the oscillator from the antenna, thus eliminating the undesirable loading of the oscillator.

Amplifiers may also perform the function of frequency multiplication in providing an r-f carrier frequency, which is some small whole number multiple of the oscillator frequency. When performing the function of frequency multiplication, the amplifiers are commonly called frequency doublers, triplers, or quadruplers, the name designating the order of frequency multiplication.

The tuned circuit constants of the r-f amplifier determine whether the fundamental frequency of the exciter or its harmonics are amplified.

It is essential that the amplifier shall not oscillate of its own accord, thereby causing possible loss of frequency control and spurious frequencies in the output. To prevent such oscillation it is necessary to provide isolation of the input and output circuits by shielding or spacing of parts and proper wiring of circuits. Another factor causing self-oscillation is the inter-electrode grid-to-plate capacity in the tube. Elimination of self-oscillation may be accomplished by one of two common methods, either of which cancels the effect of capacity coupling in the tube:

(1) Use of a screen grid type tube in which the screen grid reduces inter-electrode capacity to a negligible quantity.

(2) Some system of external neutralization employing (a) neutralizing capacitors between grid and plate or (b) inductive coupling.

The r-f power amplifiers are generally operated class C. This requires that the control grid bias be so adjusted that its value is about twice that required to reduce the plate current flow to zero when no excitation voltage is supplied from the driver. The amplifier is said to be operated as class B when the bias is adjusted to a value just sufficient to cut the plate current to zero with no excitation. If the bias is adjusted so that normal plate current flows without excitation, the amplifier is said to be operating class A. The bias voltage used in each case is dependent upon applied values of plate voltage.

Excitation or driving power is the r-f voltage supplied to the control grid of the amplifier by the preceding stage. This must be sufficient in the class C amplifier to cause the proper swing of grid potential over the r-f cycle. The r-f voltage is sufficiently large when the plate circuit reaches a state of saturation,that is, when an increase in grid excitation does not cause an appreciable increase in plate current flow. The amount of grid excitation may be determined by observing the value of rectified grid current flow as indicated by a milliammeter in the grid return circuit. Values of grid current necessary for proper class C operation vary with applied plate voltage. The proper grid current at each of the recommended values of plate voltages for a particular tube is given by the tube manufacturer.

The power input to the class C or any other class r-f amplifier is the power taken by the plate circuit from the power supply. It is calculated as the product of the applied plate voltage times the current drawn by the amplifier.

The efficiency of a power amplifier is expressed by the ratio of the power supplied to the load (output), to the power supplied to the plate circuit (input). Of the three types (classes A, B, and C) the class C is capable of the highest efficiency, 75 to 85 per cent being normal in most cases for this class operation.

In order to realize optimum output from an r-f amplifier, the plate circuit must be properly loaded and the impedance of the load must be matched to the plate impedance of the tube. This entails correct design of the plate tank circuit (tuned circuit) and correct adjustment of the coupling to the load circuit.

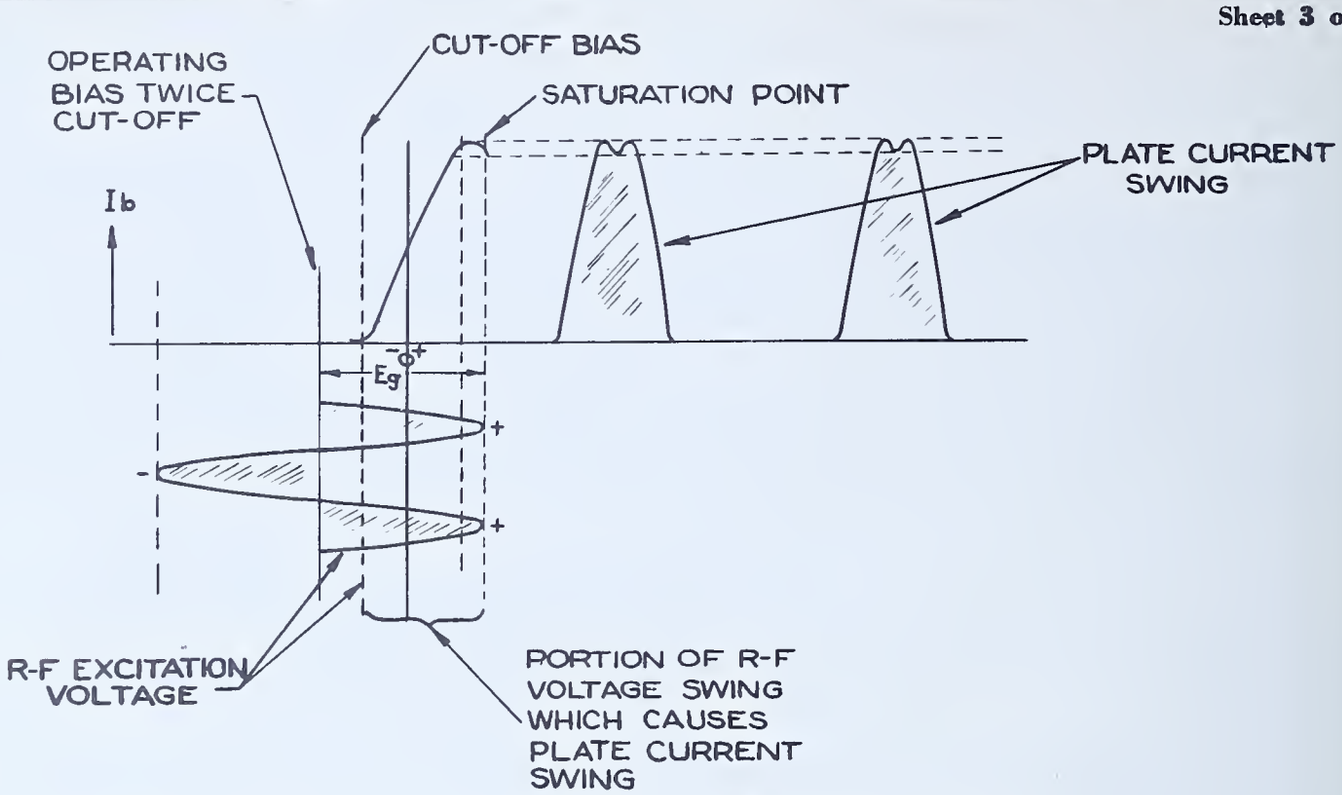

GRAPHICAL ILLUSTRATION OF CLASS C AMPLIFIER OPERATION
FIG.-1

Fig. 1 shows a graphical representation of class C amplifier operation. Note that the d-c grid bias voltage, as previously stated, is twice the value required to cut off the flow of plate current without r-f grid excitation. This results in a flow of plate current during only a portion of the positive excitation cycle.

In order to realize full efficiency, the exciting voltage swing must be sufficiently large to drive the plate current to the saturation point. This requires that the grid be driven positive; therefore, a considerable number of electrons will be attracted by the grid at the positive peak of the excitation cycle.

As a result the plate current falls at the upper end of the characteristic curve or at the saturation point. This is indicated by an indentation which appears between the peaks of the plate current swing. See Fig. 1. Although saturation and resultant decrease in plate current flow causes wave form distortion in the output of the class C amplifier, the effects are minimized by the flywheel action of the plate tank circuit. Flywheel action may be thought of as an alternate storage and discharge of energy which takes place in the plate tank circuit. This circuit is made up of an inductance and capacity. During the period of time that plate current flow occurs in the amplifier plate circuit, energy is stored. During the interval when no plate current flow occurs, the energy previously stored up in the plate tank circuit is discharged to the load. This smooths out the output from the amplifier, providing the load with a continuous flow of energy. The class C amplifier requires a relatively large amount of driving power due to the large grid swing necessary and the grid current flow. During the part of the cycle that no plate current flows there is no power loss. When the plate current does flow it attains its maximum value rapidly, causing a power output very large in proportion to plate power input. The plate of the tube works only a part of the total time required for a complete cycle and rests during the remainder. The overall result is high plate efficiency. For this reason the class C amplifier is preferred if conditions permit its use.

The Coupling of the Driver Stage to the R-F Amplifier Grid Circuit

This may be accomplished in several ways as shown in Figs. 2-4.

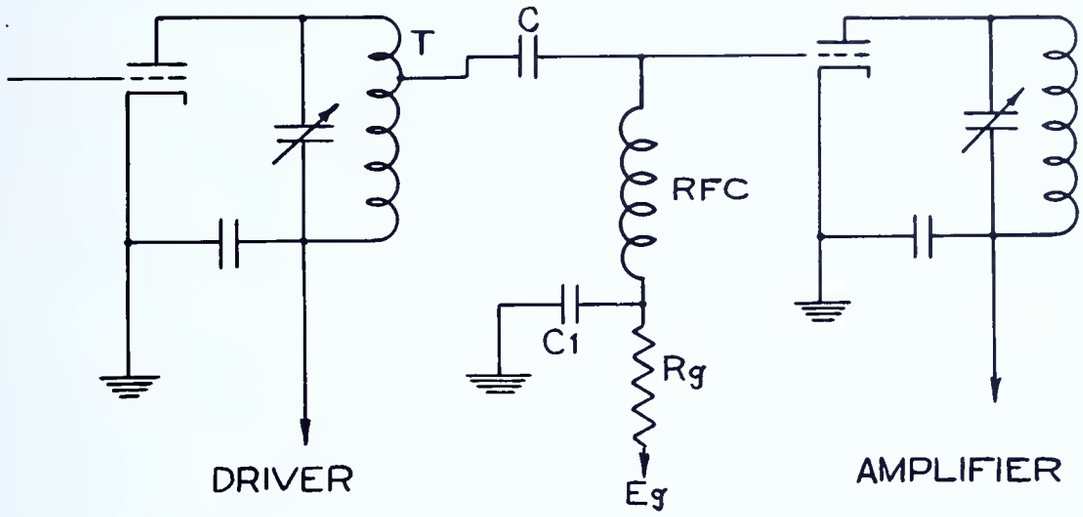

FIG.-2

CAPACITIVE COUPLING

In Fig. 2, adjustment is made by varying the value of capacitor C or position of tap T; this adjustment must be made to obtain the required value of grid current (I_g) according to the tube manufacturer's specifications.

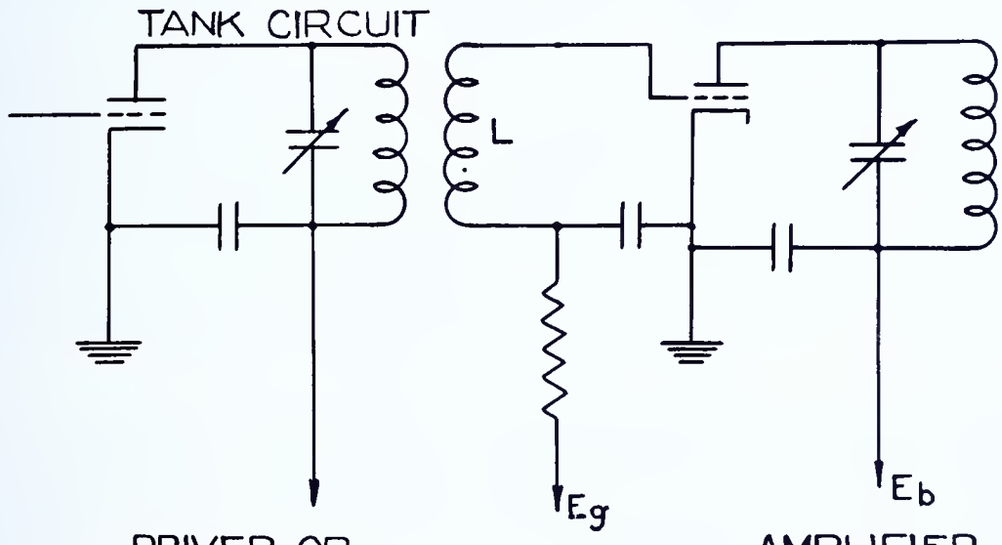

FIG.-3

DIRECT INDUCTIVE COUPLING

In Fig. 3, adjustment is made to secure the specified excitation by varying the position of coil L with respect to the inductance of the tank circuit of the exciting stage.

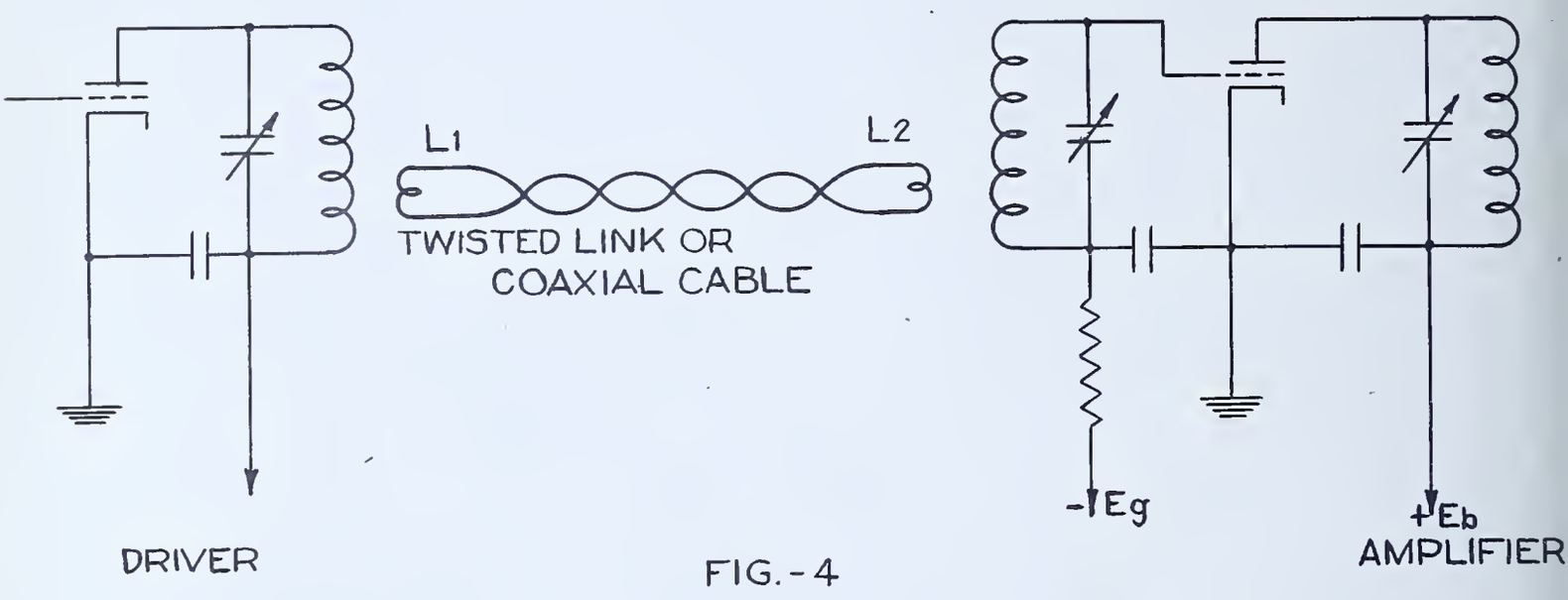

FIG.-4

INDUCTIVE LINK COUPLING

In Fig. 4, adjustment of coupling is made by varying the relation of either of the link coils L_1 and L_2 with respect to their associated tank coils. This method of coupling is widely used since it allows the amplifier to be removed a considerable distance from the exciting stage. The length of the link or coaxial cable is not critical, and efficient operation is possible with any length up to several feet.

Neutralizing Procedures

Neutralization is the process of feeding back a voltage which is equal and opposite (180° out of phase) to that passed by the inter-electrode capacity of the tube.

Neutralization of the class C amplifier is necessary to prevent self-oscillation

Tetrode Type

Neutralization in the tetrode type amplifier (Fig. 5A) is accomplished by adjusting the screen grid (G_2) voltage to such a value that self-oscillation will not be maintained; however, this adjustment is not critical. Recommended values of screen grid voltages are obtainable from tube operating characteristics supplied by the tube manufacturer. Due to the high value of the amplification factor generally prevalent with these tubes, effective shielding between the plate and grid circuits is necessary to permit complete neutralization.

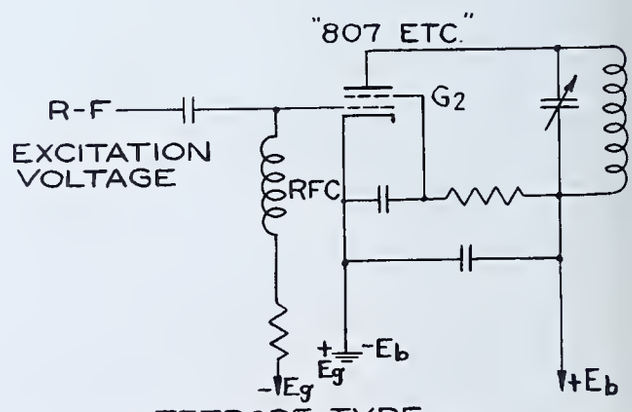

5 A TETRODE TYPE
SINGLE ENDED PLATE TANK

Triode Type

The triode type amplifier requires external neutralization of the inter-electrode capacitance of the tube. See Figs. 5 B, C, D, and E. This is accomplished by use of a neutralizing capacitor connected to feed back to the grid circuit a voltage from the plate circuit which is equal and opposite to the voltage fed back through the inter-electrode capacitance of the tube.

Adjustment is made with the plate voltage removed from the amplifier tube and excitation voltage being supplied by the driver. The neutralizing capacitor is adjusted until no r-f voltage appears in the amplifier plate tank circuit when it is tuned to resonance. A very accurate means of

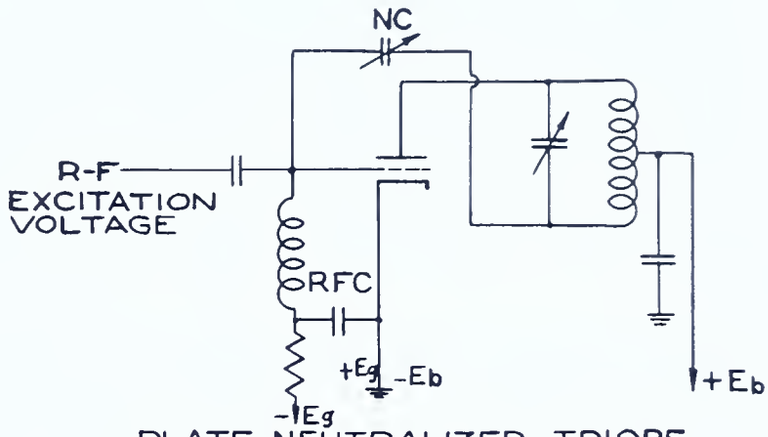

B PLATE NEUTRALIZED TRIODE
SPLIT PLATE TANK

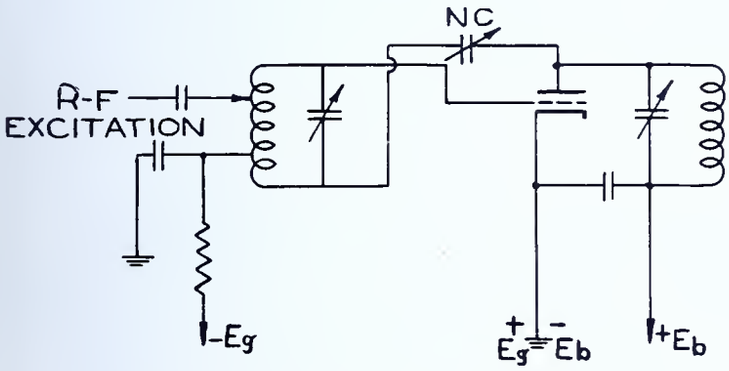

C GRID NEUTRALIZED TRIODE
SINGLE ENDED PLATE TANK

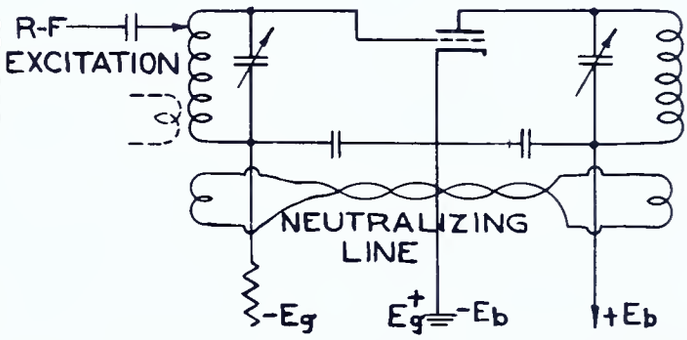

D INDUCTIVE NEUTRALIZED TRIODE
SINGLE END PLATE AND GRID TANKS

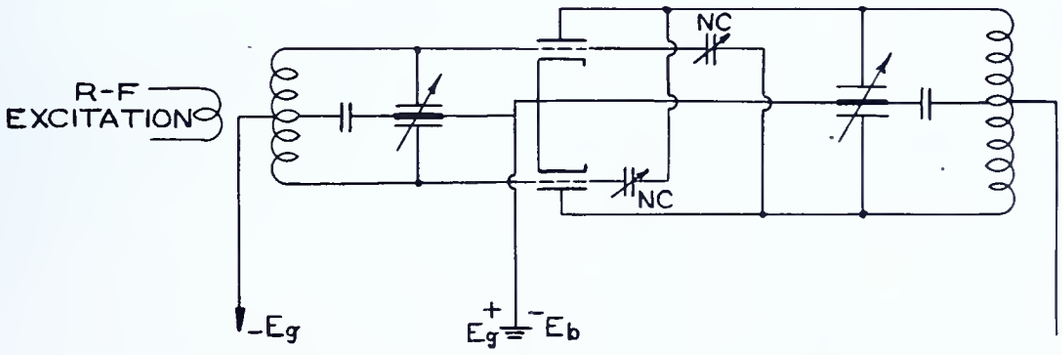

E CROSS NEUTRALIZED PUSH-PULL AMPLIFIER
SPLIT GRID AND PLATE TANKS - SPLIT
STATOR CAPACITORS

FIG.-5

determining the correct adjustment is to observe the action of a milliammeter connected in the grid return circuit when the plate tank circuit is tuned through resonance. Absence of excessive variation in grid current reading indicates a satisfactory state of neutralization. No r-f voltage should appear in the plate tank circuit when the plate voltage is applied with r-f excitation removed. Caution must be observed in this case where control grid bias is dependent upon rectification of the r-f excitation voltage alone. This is necessary, because in the removal of the excitation voltage the grid bias voltage will also be removed and operating conditions favorable to self-oscillation may be set up, thus giving a false result to this test for neutralization.

In the event that a satisfactory state of neutralization cannot be reached, several factors may be responsible; namely, (1) undesirable coupling between plate and grid tank circuits or their associated wiring, (2) leakage through the tube or socket insulation, and (3) capacitor insulation. In the case of inductive neutralization, the phase relationship of the neutralizing link may be reversed and should be changed by reversing the leads to one of the link coils which will usually remedy this situation, while the amplitude of the neutralizing voltage may be varied by changing the degree of coupling.

If the amplifier is operated as a frequency multiplier, neutralization is not necessary since the grid and plate circuits are resonant at different frequencies. This does not mean, however, that the neutralized type amplifier cannot be operated as a frequency doubler.

Parasitic Oscillations

Spurious oscillations (secondary oscillations in the circuit), which are generally of very high frequency, may occur. These are set up by circuit wiring elements in the plate and grid circuits having similar high resonant frequencies. Changing the position and length of the r-f wiring, and the addition to the grid or plate circuits of damping resistors and parasitic chokes (made of a few turns of wire) will generally clear up this condition. Cut-and-try methods are the only practical solutions to these problems. A parasitic oscillation may be indicated by: (1) overheating of the plate of the tube, (2) spurious frequencies in the output voltage, and (3) erratic operation when the excitation is periodically removed, as in keying for telegraph transmission. Failure to neutralize properly may also be an indication of the presence of parasitic oscillations which are set up by the presence of resonant circuit elements other than those necessary for operation of the amplifier at a specified frequency.

Protective Devices

If the grid bias of the class C stage is dependent upon the operation of the exciter stage, serious damage may result to the vacuum tube of the class C stage when the exciter stage for any reason is not operating.

This danger may be minimized by three means:

(1) A resistor of several thousand ohms is connected in the plate circuit of the class C vacuum tube which limits the current drawn by the tube to a safe value.

(2) A protective relay is connected in the plate circuit of the class C amplifier tube which removes the plate voltage from the tube if no grid bias voltage is present.

(3) A protective relay which opens the plate voltage circuit if the class C amplifier plate current exceeds a safe value.

Tuning the R-F Amplifier

After properly neutralizing the amplifier and adjusting the coupling to the exciter to produce the required value of grid current flow, plate voltage may be applied at reduced voltage to the amplifier plate circuit. When this is done, the plate current may rise to a high value. The plate tank capacitor must be adjusted quickly to produce resonance to reduce the plate current to a minimum value. If the plate current does not fall to a small fraction of the off-resonance value, several things may be wrong and will require adjustment. Among these are: (1) insufficient excitation, (2) insufficient d-c grid voltage, (3) ratio of capacity to inductance (impedance match) of plate tank circuit is not proper for the working conditions required by the tube used, (4) parasitic oscillation, (5) low electron emission from the cathode, and (6) presence of gas in the tube. Obviously the last two will require the replacement of the amplifier tube.

When the plate current has been adjusted to its lowest value by tuning the tank circuit, the load may be coupled to the plate tank circuit and full voltage applied. Slight readjustment of the plate tank tuning is usually necessary because of the effects of the mutual inductance of the two circuits thus coupled, in order that minimum plate current be maintained for maximum power output to the load circuit. When the amplifier is thus adjusted, it is ready for operation in carrying on communication or supplying excitation to a following amplifier stage.

Note: If the amplifier is being operated as a frequency doubler, it will be found that the plate current dip at resonance will not be as pronounced as in the fundamental type amplifier.

HOW TO CONVERT A SIMPLE SUPPLY TO ONE WHICH WILL PROVIDE BIAS VOLTAGES

In Part II of this job it is necessary to have a power supply which will provide a fixed bias for the amplifier tube. Where such a unit is not available, it will be necessary to build or convert one. A simple power supply similar to the type constructed in the Mechanic Learner course is usually available and may be converted as follows:

(1) If wet electrolytic capacitors are used, insulate the shell of those units from the chassis by means of fiber washers.

(2) Set a tap of the voltage divider to a point measuring 600 ohms from the ground end of the divider.

(3) Remove the ground connection from the end of the voltage divider.

(4) Connect the 600 ohm tap to ground.

(5) Connect the center tap of the power transformer high voltage winding and the negative connection of the filter capacitors to the end of the voltage divider which was previously grounded.

(6) Install a toggle switch for opening the B minus circuit as indicated in Fig. 6B.

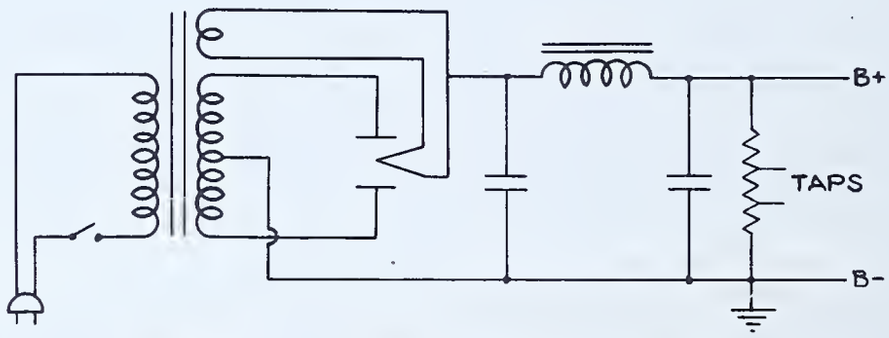

FIG.-6A A SIMPLE POWER SUPPLY

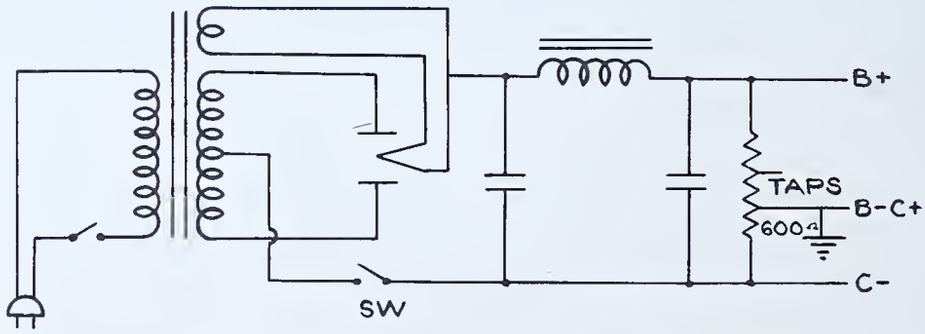

FIG.-6B A CONVERTED POWER SUPPLY

CONSTRUCT AN R-F POWER AMPLIFIER

Part I Construct an R-F Power Amplifier to Act as a Frequency Doubler
Part II Construct an R-F Power Amplifier to Act as a Class C Final Amplifier

General Information:

Two r-f amplifiers are constructed in this job. The first employs a beam power tube working as a frequency doubler and is built on the same chassis as the crystal oscillator constructed in Job 3. The oscillator is capacitively coupled to the r-f doubler, thereby supplying its grid excitation.

The second r-f amplifier is constructed on a separate chassis and employs a beam power tube connected as a triode working class C. The grid and plate tank circuits of this stage operate at the same frequency, necessitating neutralization. Excitation for this final stage is supplied by link coupling from the frequency doubling r-f amplifier.

Part I

Specifications:

Construct a frequency doubling type r-f amplifier as an addition to the crystal oscillator completed in Job 3. Follow specification sketches Figs. 7 and 8.

Note: If no crystal oscillator is available, use the electron-coupled oscillator constructed in Job 2.

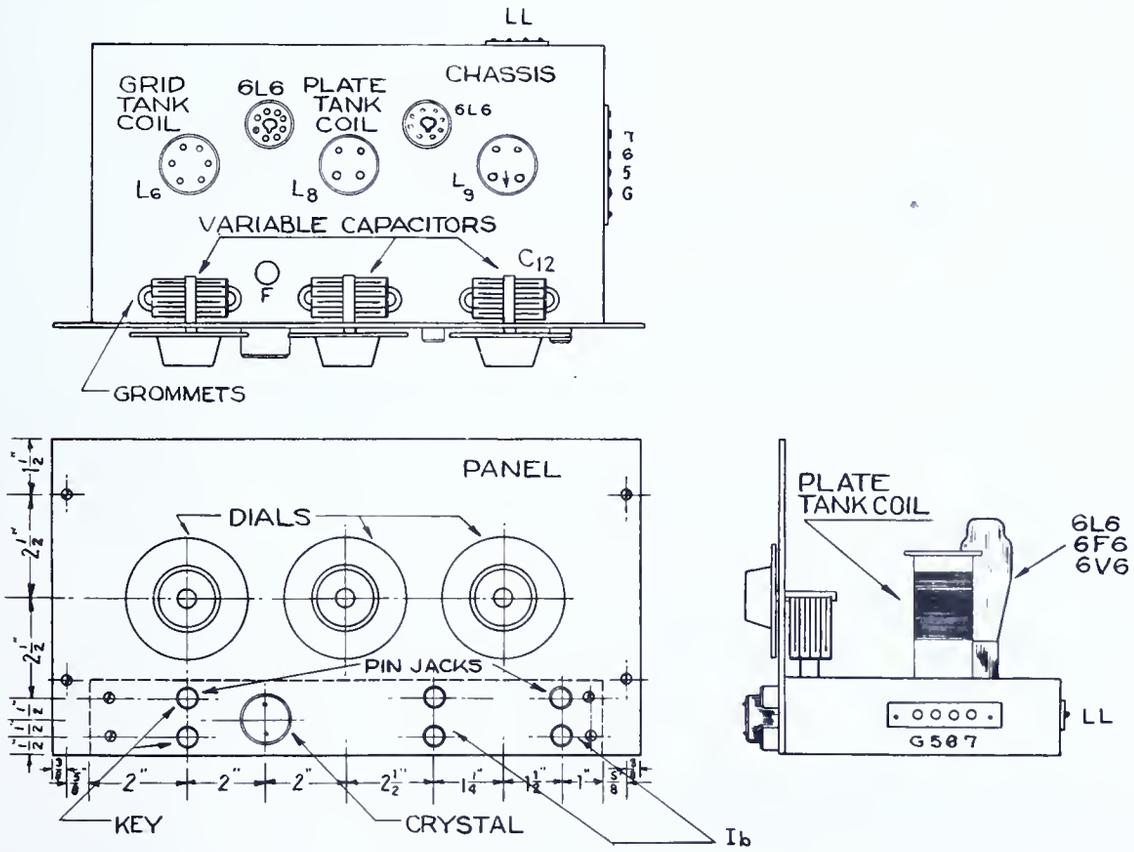

FIG.-7

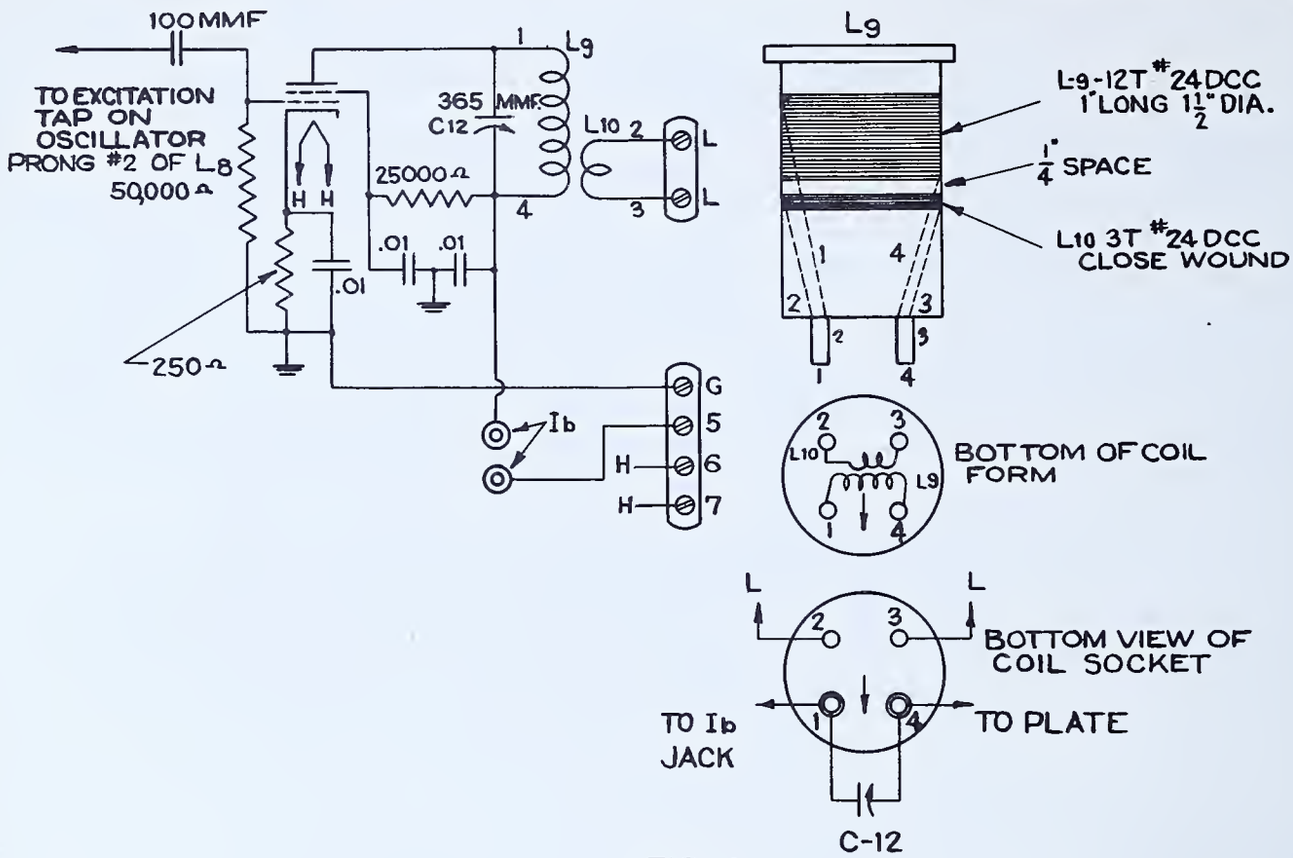

FIG.-8

Tools needed:

1. Soldering iron
2. Long nose pliers
3. Diagonal cutting pliers
4. Screw driver
5. Socket punches
6. Drills
7. Hand drill
8. Socket wrenches

Note: Tools and Equipment are the same for Parts I and II with the exception of the power supply as noted. Each part, however, has its own Materials listed.

Equipment needed:

1. 1- Absorption frequency meter
2. 1- Heterodyne frequency meter or communications type receiver.
3. 1- Neon Lamp ($\frac{1}{4}$ watt)
4. 1- Simple power supply, +300v d-c 100 ma., 6.3v a-c, 2 amp. (for oscillator doubler used Part I)
5. 1- Converted power supply, +300 v d-c, 100 ma., -20v d-c "C" supply, 6.3v a-c, 2 amps. (for Class C amp. used in Part II)
6. 1- Multimeter
7. 1- Vacuum tube voltmeter (for r-f measurement)
8. 1- Cathode ray oscillograph
9. 1- Dummy antenna (load 10 watts)
10. 2- 6L6 or 6F6 tubes
11. 1- 5000 ohm 10 watt variable resistor.

Materials needed:

Part I - Doubler:

1. 1- Exciter chassis used in Jobs 2 and 3, wired for crystal or e.c.o. and complete with tube and coils
2. 1- Octal socket
3. 1- 4 prong socket
4. Push-back wire (#16 solid preferred)
5. 1- 365 mmf. variable capacitor
6. 3- .01 mfd. paper capacitors, 600v

7. 1- .0001 mfd. mica capacitor, 1000v
8. 1- 4 prong coil form, $1\frac{1}{2}$"
9. 1- 250 ohm carbon resistor, 1w
10. 1- 25,000 ohm carbon resistor, 1w
11. 1- 50,000 ohm carbon resistor, 1w
12. #24 B&S D.C.C. magnet wire
13. Misc. terminal strips and mounting hardware
14. Solder

Procedures:

A. Construction of Frequency Doubler

1. Check all parts and the oscillator unit for operating condition.

2. Make wiring diagram for addition of r-f doubler stage to oscillator. Refer to schematic, Fig. 8, and chassis layout, Fig. 7.

3. Have wiring diagram checked by instructor.

4. Lay out chassis as in Fig. 7 and drill necessary additional holes.

5. Mount parts securely.

6. Wire according to wiring diagram and schematic.

7. Wind coil L_9 according to specifications, Fig. 8.

8. Make resistance analysis of doubler section and compare to schematic circuit values.

9. Have instructor check work for neatness and correctness.

B. Testing

Caution: Observe the following safety precautions while making test:

(1) Be careful that your body does not come in contract with parts of the circuit carrying r-f voltage; r-f burns, which are slow to heal, will result from such contact.

(2) In making voltage measurements, be careful that your body does not complete a path for the high voltage direct current to ground. Electric shock will result if this is ignored.

(3) In order to avoid possible electric shock, make voltage measurement with one hand, keeping the other behind your back or in your pocket. Hold the positive test lead by the insulated portion of the test prod.

(4) Always turn off the power supply before making wiring changes or mechanical repairs.

1. Make a resistance analysis of the completed amplifier unit. Check against point to point schematic values.

2. Correct such errors as may exist.

3. Connect power supply to oscillator-amplifier unit to secure the required voltages.

4. Connect a 5000 ohm, 10 watt variable resistor in the B+ lead to the r-f amplifier to make possible a reduction in its plate voltage. This is connected in series with the milliammeter circuit of the amplifier stage.

5. Connect the key and milliammeters (0-100 ma.) to proper jacks as shown in Fig. 7.

6. Turn on power supply and make a point to point voltage check.

7. Remove plate voltage from amplifier stage by disconnecting plate milliammeter in that stage.

8. Place r-f amplifier tube and coils in proper socket.

9. Couple the exciter r-f voltage to amplifier grid circuit by connecting the clip on L_8 to the tap nearest the top of coil L_8.

10. Turn on exciter, and check exciter for r-f output (at L_8) with neon lamp. See Reference D.

11. Adjust the exciter for proper frequency as in Job 2 or 3.

12. Apply reduced plate voltage (approximately 150v) to amplifier by connecting milliammeter to plate current jacks. Adjust the 5000 ohm variable resistor to obtain the required plate voltage.

13. Tune the amplifier tank circuit to resonance as indicated by the dip in plate current for that stage.

14. Test for r-f output by touching plate terminal of amplifier tank with neon tube.

15. Increase the plate voltage to approximately 300v by decreasing the 5000 ohm variable resistor in the B+ lead to zero ohms. Record in notebook the actual value of plate voltage (E_b) and plate current (I_b) on copy of form 1.

16. Connect a 10 watt dummy load to amplifier. See Reference G.

17. Tune the dummy load to resonance as indicated by a rise in plate current and illumination of lamp of dummy load.

    Note: Slight readjustment of plate tank tuning is generally necessary.

18. Adjust dummy load coupling to obtain equal illumination of dummy and standard lamp. The power input to load is now equal to wattage rating of lamp. This is the "loaded" condition of the amplifier.

19. Observe value of plate current and plate voltage for loaded condition. Record in notebook on copy of form 1.

20. Calculate power input ($P = E_p \times I_p$) for existing load conditions. Record in notebook.

21. Calculate amplifier efficiency. Per cent Efficiency = $\frac{\text{Watts to load}}{\text{Watts to plate}} \times 100$. Record in notebook.

22. Set the clip to the next lower tap on oscillator plate tank coil L_8; this reduces the r-f excitation voltage. Observe the effect on output and efficiency which results from the reduction of the r-f voltage by changing the coupling to the exciter.

23. Compare the relative values of r-f voltage appearing at the exciter plate tank and amplifier plate tank by using a vacuum tube voltmeter, field strength meter, or oscillograph. See Reference D.

24. Measure the frequency of the amplifier voltage by the use of absorption type and heterodyne type frequency meters. Record in notebook. See Reference H.

25. Open and close the telegraph key to make the units operate as a "cw" transmitter. Observe the character of the generated signal with the heterodyne frequency meter as a listening monitor. This should be clean cut and free from chirps. See Reference H.

26. Turn off power supply, but leave oscillator doubler unit properly tuned for Part II of this job.

Part II Construct an R-F Power Amplifier to Act as a Class C Final Amplifier

Specifications:

Construct a complete neutralized amplifier as a separate unit to be excited by the unit completed in Part I of this job. See Figs. 9 and 10 for chassis layout and schematic diagram.

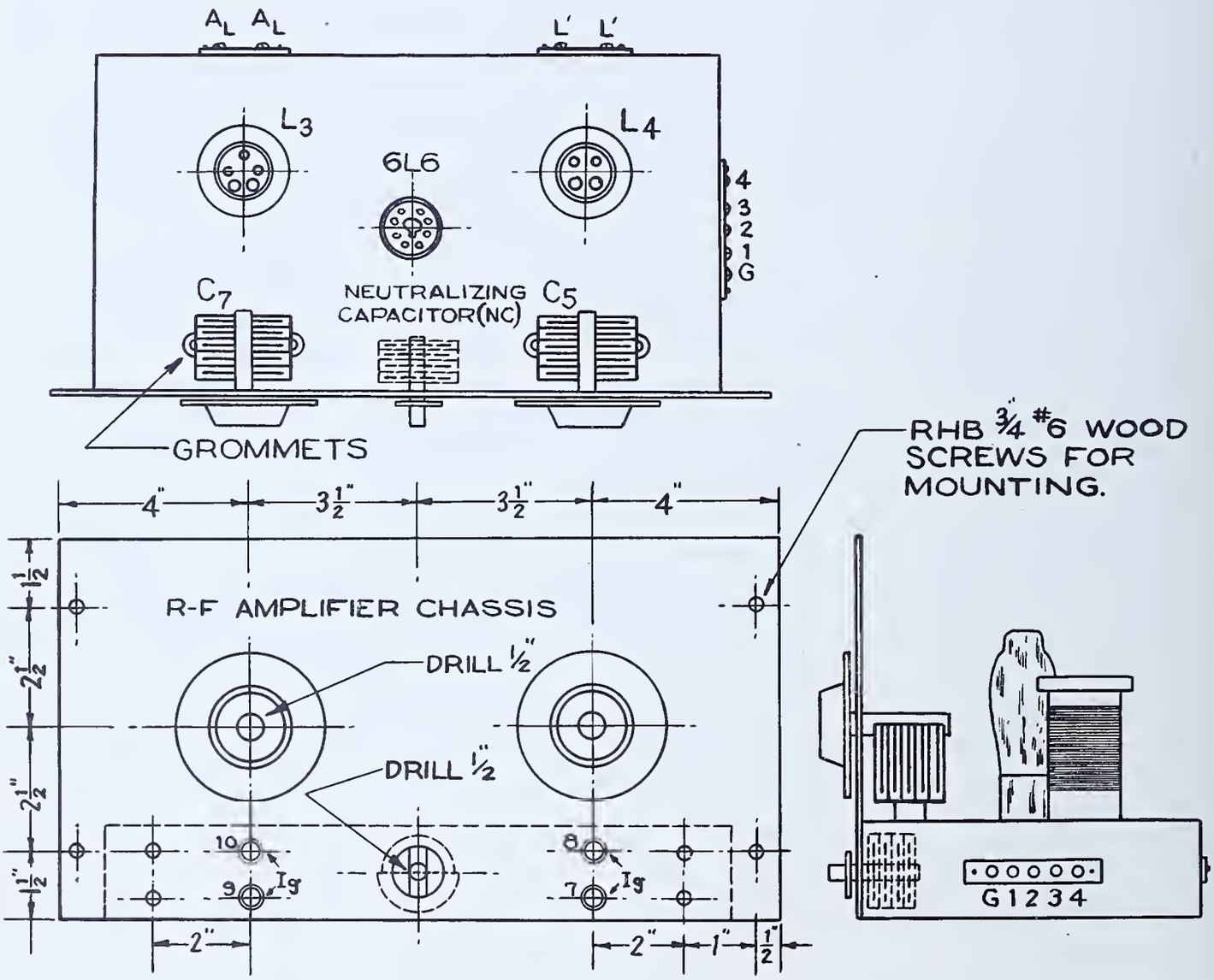

FIG.-9

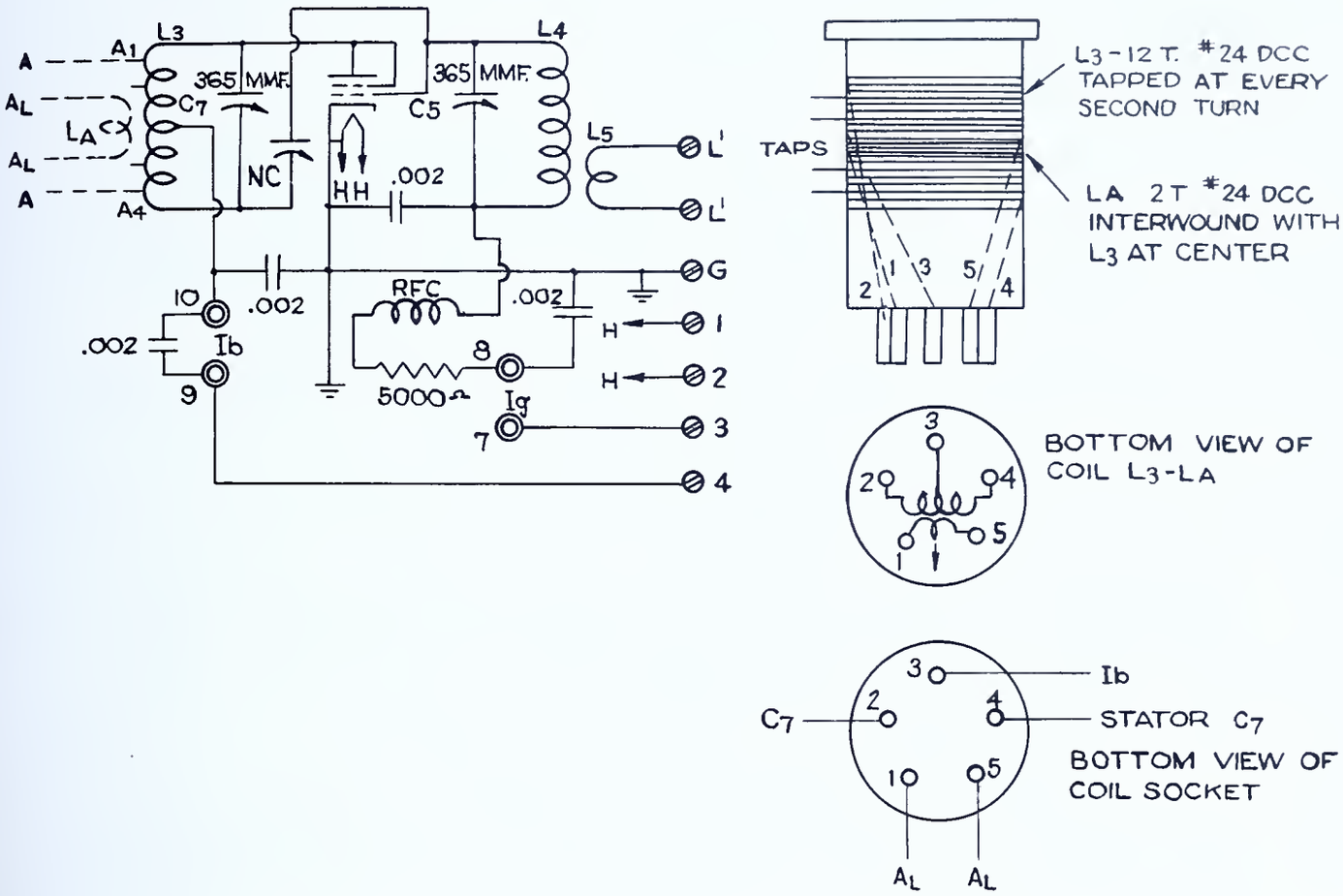

FIG.-10

Materials needed:

Part II - Amplifier

1. Chassis 7"x13"x2" and panel 8"x15" for class C amplifier
2. 1- 5 prong socket
3. 1- 4 prong socket
4. 1- Octal socket
5. 4- Phone-tip jacks
6. 4- .002 mfd. mica capacitors, 1000v
7. 2- 365 mmf. variable capacitors
8. 1- 35 mmf. variable capacitor, for Neutralizing Capacitor, N. C.
9. 1- 4 prong coil form, 1½" dia.
10. 1- 5 prong coil form, 1½" dia.
11. 1- 2.5 mh. r-f choke
12. 2- small alligator clips
13. Push-back wire
14. #24 B&S D.C.C. magnet wire
15. Misc. terminal strips and mounting hardware
16. 1- 5000 ohm 1 watt resistor
17. 5' twisted pair link.

Procedure:

A. Construction

1. Wind coil L_4 - L_5 similar to L_9 except that the primary L_5 must be wound loosely over the coil form, permitting its position with respect to L_4 to be varied. The coupling between these coils will be varied to change the excitation to the amplifier (Step 16 of "Testing procedure", on following page).

2. Wind coil L_3 according to specifications given in Fig. 10.

3. Test all parts for operating conditions.

4. Lay out and drill chassis as required. See Fig. 9.

5. Mount all parts on chassis.

6. Make a wiring diagram of the amplifier according to the schematic and chassis layout.

7. Have diagram checked by the instructor.

8. Wire unit according to wiring diagram and schematic.

9. Have work checked by instructor.

B. Testing

1. Make a resistance analysis of the completed amplifier unit.

2. Correct such errors as may exist.

3. Connect a separate power supply to the final amplifier unit. This power supply must be of similar construction to that shown in Reference K, to supply bias voltages.

4. Plug coils and tube into respective sockets.

5. Connect the output of the oscillator-doubler unit (L-L) to the input of the final amplifier (L^1 - L^1) by means of a twisted pair link.

6. Remove the 5000 ohm 10 watt variable resistor from the oscillator doubler B+ circuit and repair that circuit to normal.

7. Connect the 5000 ohm 10 watt variable resistor in the B+ lead between the final amplifier and its power supply.

8. Adjust this resistor to secure maximum resistance in the circuit.

9. Connect a milliammeter (0-10 ma.) in the grid circuit jacks (I_g) of the final amplifier.

   Note: The plate milliammeter is not connected at this time in order that no voltage will be applied to the plate when the power supply is turned on.

10. Turn on the oscillator-doubler power supply and make any necessary adjustments in doubler for resonance.

11. Check for r-f at L_9 and L_4 with neon lamp.

12. Turn on power supply of final amplifier.

13. Adjust grid tank tuning capacitor C_5 to resonance. This will be indicated by maximum reading in grid milliammeter.

14. Rock (rotate back and forth) the plate tank capacitor C_7.

15. Notice if grid milliammeter reading varies as this capacitor is rocked, and adjust the neutralizing capacitor until minimum variation in grid current occurs as the plate tank capacitor is rotated through resonance.

16. Adjust the position of the coupling coil L_5 with respect to L_4 to secure a reading of about 10 ma. in the grid milliammeter.

17. Repeat Steps 12 to 26 of testing procedure in Part I, making all adjustments and measurements on final amplifier stage. Record results in notebook on second copy of form 1.

QUESTIONS

Place the answers to these questions in your notebook or on form as directed by instructor.

1. Why is it not necessary to neutralize a frequency doubler?
2. Show graphically the action taking place in class C operation.
3. How does the d-c plate power input compare with the power absorbed by the dummy antenna?
4. How much grid bias voltage is normal for a class C amplifier?
5. How is the grid bias voltage obtained for a class C amplifier?
6. Does the grid bias in a class C amplifier with self-bias vary with the value of grid excitation voltage?
7. What action takes place in the grid bias circuit when the excitation is reduced? How does it affect the plate current?
8. What are the effects of insufficient grid excitation voltage?
9. Why is a class C amplifier used?
10. What is a frequency doubler? Why is it used?
11. How may the value of r-f grid excitation be increased? Decreased?
12. What methods of coupling between the exciter and the amplifier may be used?
13. How may points of high or low r-f voltage be located?
14. What are the outstanding advantages of the class C r-f amplifier over class A or class B r-f amplifiers?
15. How could you determine when sufficient r-f excitation is being supplied to a class C amplifier?
16. How is the plate circuit power input to a class C amplifier determined?
17. How may the power output of a class C amplifier be measured?
18. How may resonance of the plate tank circuit be determined?
19. What effect has loading on the value of d-c plate current?
20. How is the efficiency of a class C amplifier determined?
21. What effect would improper neutralization have on the operation of a class C amplifier?
22. What adjustment is necessary to neutralize the tetrode type r-f amplifier?
23. Show by means of schematic diagrams three methods of neutralizing a triode r-f amplifier.
24. What are parasitic oscillations? How are they produced, and how can they be eliminated?
25. What operating characteristics indicate the presence of parasitic oscillations?

References:

Everitt, W. L. et al., Fundamentals of Radio, pp. 243-284, 291-303.
Henney, K., Principles of Radio (Fourth Edition), pp. 323-361.
The Radio Amateur's Handbook (Any Edition), A. R. R. L., Chapter on Transmitter Design.
The Radio Handbook (Any Edition), Editors and Engineers, Chapter on Transmitter Theory.

AMPLIFIER MEASUREMENTS

FORM 1	No Load	Loaded
Plate E_b Voltage	Make two copies of this form in notebook for	
Plate I_b Current	Steps 15 and 19 of Testing Parts I and II	

UNIT 5

THE SPEECH AMPLIFIER AND MODULATOR

Reference L — The Audio Frequency Amplifier. Page 82

Reference M — The Speech Amplifier and Modulator. Page 86

JOB SHEET 5 — CONSTRUCT AN AUDIO AMPLIFIER. Page 90

THE AUDIO-FREQUENCY AMPLIFIER

General Information:

The audio-frequency amplifier is a common device in the field of electronics. It makes use of the vacuum tube to increase the strength of applied signal voltages within the audio frequency range.

The following outline provides some facts about audio amplifiers:

A. Applications of the A-F Amplifier

1. In radio receivers to amplify a-f signal voltages, thus providing greater voltage or power output
2. In radio transmitters to amplify a-f signals and modulate the r-f carrier generated by the transmitter.
3. In public address (PA) systems to amplify voice and music.
4. In phonograph units to amplify record reproduction.
5. In recording units to drive (actuate) the cutter.
6. In telephone systems to amplify long distance transmissions.
7. In theatres to amplify the reproduction of the sound track of the film.
8. In hearing aids, office intercommunicators, facsimile transmission, and other applications.

B. Functions of the A-F Amplifier

1. To amplify electrical impulses within a wide band of audible frequencies (20 to 16,000 cycles per second).
2. To supply enough power to operate loudspeakers, recording cutters, and to modulate continuous wave transmitters.

C. Principle of Operation

Vacuum tubes serve as voltage amplifiers to step up a small voltage audio frequency signal to a large voltage signal. Other vacuum tubes driven by the amplified signal voltage act as power amplifiers to provide a sufficient power output.

D. Devices Coupled to the Input Circuit

1. Microphones
2. Phonograph pickups
3. Photo-electric cells
4. Detector stage of radio receiver

E. Devices Coupled to the Output Circuit

1. Loudspeakers
2. Recording cutters
3. Continuous wave transmitters

F. Rating Specifications

1. Power (watts) consumed from supply line.
2. Line voltage and frequency to which they should be connected.
3. Number of input channels.
4. Audio power output (watts)
5. Amplification (gain in decibels, voltage, or power) of each channel.
6. Input and output impedances.
7. Frequency range amplified with the required uniformity.

Voltage Amplifier Coupling

Audio amplifiers are generally designed to amplify voltages within a wide band of audio frequencies. For this reason untuned circuits are used to couple the tubes. One or more tubes are used as voltage amplifiers, their purpose being to amplify the voltage output of the microphone or phonograph pickup. These tubes are connected in cascade; that is, the output or plate circuit of the first is connected to the input or grid circuit of the second. See Fig. 1. The total amplification or gain of the channel is the product of the actual gain of the first stage times the actual gain of the second, times the gain of the third, etc.

The total gain in the voltage amplifier illustrated in Fig. 1 would be 200v x 10v x 10v = 20,000 volts.

Voltage amplifier tubes may be coupled by resistance coupling, transformer coupling, or impedance coupling. See Figs. 1,2, and 3.

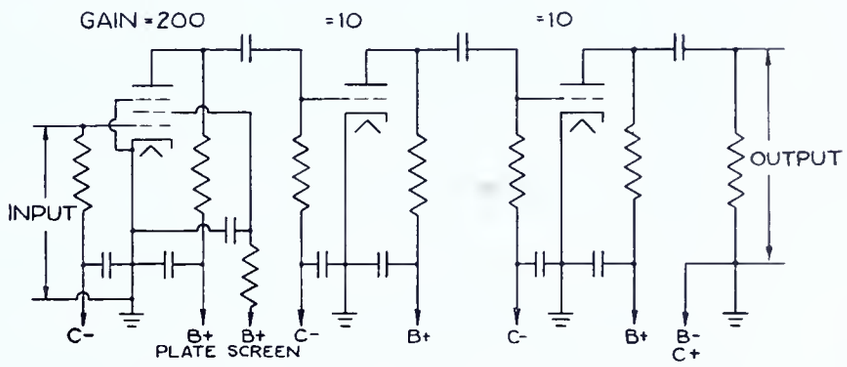

RESISTANCE COUPLED AMPLIFIER
FIG.-1

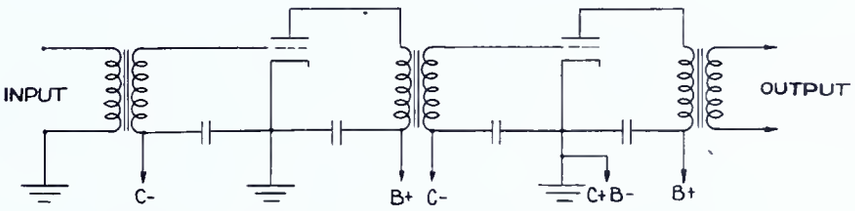

TRANSFORMER COUPLED AMPLIFIER
FIG.-2

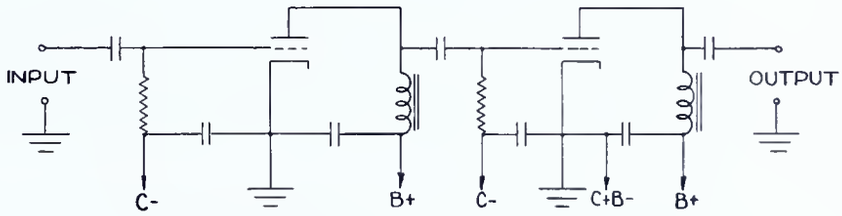

IMPEDANCE COUPLED AMPLIFIER
FIG.-3

Resistance coupling is the most common type for voltage amplification and gives good frequency response; that is, all frequencies within the range of the amplifier are amplified uniformly.

Transformer coupling is used with low gain triode amplifier tubes to increase the amplification of each stage, or in any circuit where a power transfer is required as in driver stages, output stages, or modulator stages. If the transformer has a step-up ratio of 3 to 1 and the triode has an amplification of 7, the total stage gain is 3 x 7 or 21.

Impedance coupling is similar to resistance coupling but employs a high impedance a-f choke coil in place of the plate resistor. This permits more plate voltage to be applied to the amplifier tube, since the d-c resistance of the choke is low in comparison to that of the plate resistor. Since the impedance of the choke is high, a high degree of amplification is obtained from the stage. This type of coupling is seldom used because of its inflexibility.

Multi-channel Amplifier

It is often desirable to operate a microphone and phonograph pickup into the amplifier simultaneously. This necessitates two input connections to the amplifier. These input circuits are called channels. When one channel requires more gain than another, an additional voltage amplifier stage is added to it. The microphone, having lower voltage output than the phono-pickup, is connected to the high gain channel.

A potentiometer connected in each channel permits individual adjustment of volume for either microphone or phonograph. A vacuum tube connected as a "mixer" causes the signal voltages to be combined before being applied to the final power amplifier stage so that microphone and phonograph signals may be heard simultaneously in the speaker.

Class of Operation of the Voltage Amplifier

All voltage amplifier tubes are designed to operate under class A conditions. In class A the plate current flows continuously throughout the cycle of alternating voltage applied to the grid. Operation is over the linear portion of the grid-voltage-plate-current characteristic curve. Improperly designed circuits or overloading causes voltage amplifiers to operate on a non-linear portion of the characteristic curve, and distortion results.

The output of the final voltage amplifier connects to the power amplifier grid circuit and supplies sufficient grid voltage to get full power output from the power amplifier. Power amplifiers are designed to have relatively large plate currents in order that the power output will be large.

Power Amplifiers

Power amplifiers may operate under class A, class AB, or class B conditions.

Class A power amplifiers may employ one tube, or two tubes in parallel, or push-pull for greater power. Class AB or B amplifiers always employ two tubes in push-pull to prevent excessive distortion. Some tubes, such as types 53, 6A6, and 6N7, which consist of two tubes within one envelope, are used as class B amplifiers.

The average plate current drawn by class A amplifier tubes is relatively constant at different signal levels or at various levels of power output. The amount of signal distortion is very small in a well designed class A power amplifier stage, although the efficiency (the ratio of power output to power input) is low.

Class B power amplifiers are characterized by higher distortion than class A amplifiers (particularly at low signal levels), but greater efficiency is obtained. Average plate current increases with signal level or power output in the class B amplifier. This may be indicated by a milliammeter in the plate return circuit of the class B stage.

THE SPEECH AMPLIFIER AND MODULATOR

Circuit Function

The audio amplifier constructed from Job Sheet 5 is a four stage unit with input channels for microphone and phonograph pickup. This amplifier is used as a single unit to operate a loudspeaker, and as a speech amplifier and modulator as part of a transmitter. The description of the amplifier circuit follows:

Microphone Channel

Refer to schematic diagram, Fig. 5, Page 91. The microphone is connected to the high gain input and thus to grid #1 of the 6SJ7 tube and the chassis. A 5 megohm resistor is also connected between these points, providing a leakage path for electrons to flow. This resistor is high in value and does not shunt out the a-f signal voltage developed by the microphone.

The 1500 ohm resistor connected between the cathode of the 6SJ7 tube and the chassis has the plate and screen grid current of the tube flowing through it. This causes a voltage drop across the resistor. The cathode of the 6SJ7 tube is thus positive with respect to the chassis. Fig. 4 illustrates the polarities in the circuit of the 6SJ7 tube.

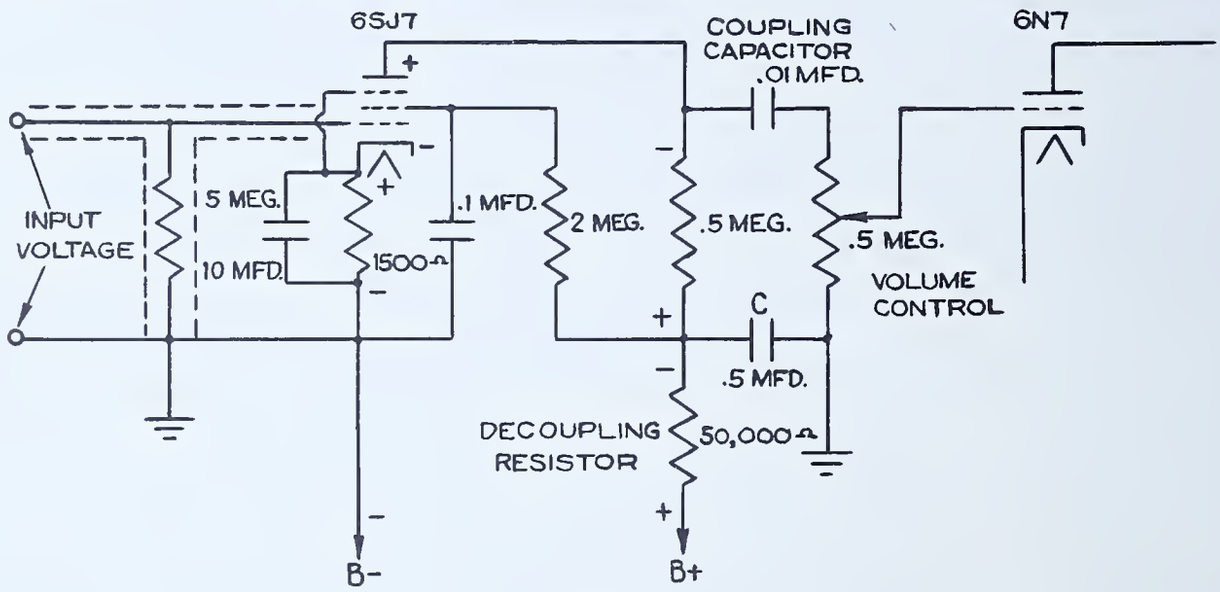

FIG.-4

The cathode is positive with respect to B- (or chassis) but is negative with respect to plate. Since the control grid of the tube is connected through the 5 megohm resistor to chassis, the grid is negative with respect to the cathode. There is no d-c current flow in the grid circuit, and thus no d-c voltage drop across the 5 megohm resistor. The negative grid bias on this tube is, therefore, equal in value to the voltage drop across the 1500 ohm resistor in the cathode circuit.

The 10 mfd. capacitor which shunts the 1500 ohm resistor has a very low impedance to audio frequency currents and effectively keeps the cathode at chassis zero a-f potential. See Fig. 4.

This is necessary because the signal must be applied between cathode and grid of the tube. The amplified signal in the output of the tube is developed between plate and cathode. If the cathode were not by-passed, a portion of both input and output signals would appear across the cathode bias resistor. Since these signals are 180° out of phase, they will tend to cancel or buck each other. This effect is called degeneration and will cause reduced amplification from the 6SJ7 stage. (In some audio amplifiers employing a beam power output tube, degeneration is desirable to reduce distortion. But in this amplifier degeneration is unnecessary, as very little distortion is generated, and the maximum amount of amplication is desirable).

A 2 megohm resistor, connected between the B+ line and the screen grid of the 6SJ7 tube, causes a drop in the B+ voltage to a value suitable for the operation of the screen grid.

The 0.1 mfd. capacitor, by-passing the screen grid to chassis, keeps the screen grid at chassis a-f potential and prevents voltage variations due to changing current.

The 0.5 megohm resistor in the plate circuit of the 6SJ7 tube permits current to flow to the plate of the tube but is sufficiently high in value to secure the large amount of amplification that is possible from the 6SJ7 pentode amplifier. This stage is of the voltage amplifier type and is sometimes referred to as a pre-amplifier stage, since it amplifies the signals from a very low level output microphone previous to amplification by the main section of the amplifier.

The decoupling capacitor C (Fig. 4) connected to one end of the plate resistor keeps that point at chassis a-f potential, since it presents a low impedance path to audio frequencies. Since both the cathode and this end of the plate resistor are at chassis a-f potential, the a-f signal in the output of the 6SJ7 tube appears across the plate resistor.

A coupling capacitor is connected between the plate of the 6SJ7 and the ungrounded side of the volume control. This capacitor has a low reactance to audio frequencies compared to the resistance of the plate resistor and volume control. Thus the signal from the output of the 6SJ7 is impressed on the volume control potentiometer. At the same time, the coupling capacitor prevents the positive d-c voltage at the plate of the 6SJ7 from reaching the grid of the 6N7 tube. If this capacitor has leakage, the grid of the tube will be made positive, causing distortion.

The volume control potentiometer is connected so that the amount of a-f voltage applied to one grid of the 6N7 tube may be varied. This controls the volume level of the microphone channel, since the amplified signals from the microphone appear across the potentiometer.

Phonograph Channel and Mixer Stage

The 6N7 tube is a dual triode tube. It has two separate triode sections in one envelope. The filament and cathode connections are common (connected together) while the grid and plate leads come out to separate pins.

The phonograph is connected to the low gain input (See Fig. 5) so that a-f signals generated by this unit are impressed across the low gain channel potentiometer. The grid of the second section of the 6N7 tube is connected to the rotating arm of this potentiometer so that the amount of the input signal that is applied to the grid may be varied. Since the output of the phonograph pickup is considerably greater than the output of the usual microphone, no preamplification is necessary for the phonograph pickup.

A 1500 ohm resistor connected between the cathode of the 6N7 and chassis serves as the bias resistor for that tube. As in the case of the 6SJ7, the cathode is positive with respect to chassis; and since the grids of the 6N7 are connected through the volume controls to chassis, the grids are made negative with respect to the cathode.

A 10 mfd. capacitor, connected from the cathode of the 6N7 to the chassis, by-passes audio frequencies around the bias resistor. This keeps the cathode at chassis a-f potential.

The plates of the 6N7 tube are connected together. Signals from both the microphone and the phonograph pickup appear in the plate circuit of the 6N7 tube.

Driver and Output Stage

The 6N7 mixer tube is resistance-coupled to the 6C5 tube by means of a 0.1 megohm plate resistor, a .01 mfd. coupling capacitor, and a 0.5 megohm grid resistor. The 0.5 megohm grid resistor is a potentiometer whose rotating arm is connected through a .01 mfd. capacitor to the chassis. The tone may be varied by adjusting this potentiometer. When the .01 mfd. capacitor is swung to the grid side of the potentiometer, the higher audio frequencies are by-passed through the capacitor to the chassis. Only the bass (lower audio) frequencies continue through the tube and on to the speaker. This gives the effect of a deep tone. On the other hand, when the arm of the potentiometer is swung so that both sides of the .01 mfd. capacitor are at chassis potential, the higher audio frequencies also continue through to the speaker.

A 1500 ohm resistor and 10 mfd. capacitor serve as bias resistor and cathode by-pass capacitor for the 6C5 tube. This tube acts as a driver to supply sufficient power to the 6N7 grids. This power must be transferred through the input class B transformer to supply current to the grids of the 6N7 class B power amplifier tube when they are driven positive. The class B input transformer usually has a one-to-one or step-down ratio to match the plate impedance of the 6C5 tube to the grid impedance of the 6N7 tube. The plates of the 6N7 power amplifier are coupled by the output transformer to the speaker. This transformer has a step-down ratio to match the plate impedance of the 6N7 tube to the voice coil impedance of the speaker. This permits optimum power transfer from the power amplifier stage to the speaker.

Filter

A 50,000 ohm resistor and 0.5 mfd. capacitor, indicated on the schematic diagram, Fig. 4, as decoupling units, serve the following purposes: (1) They supply additional filtering of the voltage from the power supply. This removes ripple from the d-c voltages supplied to the plates of the 6N7 and 6SJ7 voltage amplifiers. Any ripple in this voltage will induce hum in these stages. Since hum induced here is amplified by the following stages, more filtering is necessary for the first stages than for the output stages of the amplifier. (2) They serve as a filter system to prevent the amplified voltage in the plate circuit of the 6C5 from feeding back to the plate circuit of the 6SJ7 tube.

When the filter is omitted, the amplifier may either regenerate to cause distortion, or oscillate, which makes the unit unsatisfactory for operation.

CONSTRUCT AN AUDIO-AMPLIFIER

General Information:

The circuit function of the four stage audio amplifier constructed in this job is described in detail in Reference L.

This amplifier is to be kept intact for use in Job 6 where it will be tested by means of the audio oscillator.

It will also be used in Job 7, in which a complete transmitter is assembled. At that time the output transformer is removed from this amplifier and a modulation transformer mounted in its place; the amplifier then being used as a modulator for the transmitter.

Specifications:

1. Construct an audio amplifier according to Figs. 5 and 6.

2. Test audio amplifier for operation, using phonograph and microphone input and PM speaker connected to output.

   Note: The following rules should be observed in the laying out and construction of audio amplifiers to improve the operating characteristics of the finished unit:

   (1) Locate parts so that the input and output circuits are separated on the chassis as much as possible.

   (2) Locate parts so that the grid and plate leads are as short as possible.

   (3) Mount sockets so that the grid and plate wiring is remote from, or does not cross the filament wiring.

   (4) Mount input transformers in the position in which the least hum is picked up. This may be determined by adjusting the position of the transformer while the amplifier is working. Minimum hum in the speaker indicates the correct position.

   (5) Twist filament wiring.

   (6) Keep power supply parts and wiring remote from amplifier input circuits.

   (7) Make sure all soldered joints are good, particularly any that are made to the chassis.

   (8) Make all chassis connections from input circuits to one common point. Make all chassis connections to the power supply or output circuits to one common point.

   (9) Shield input circuit wiring and parts, if necessary to reduce hum.

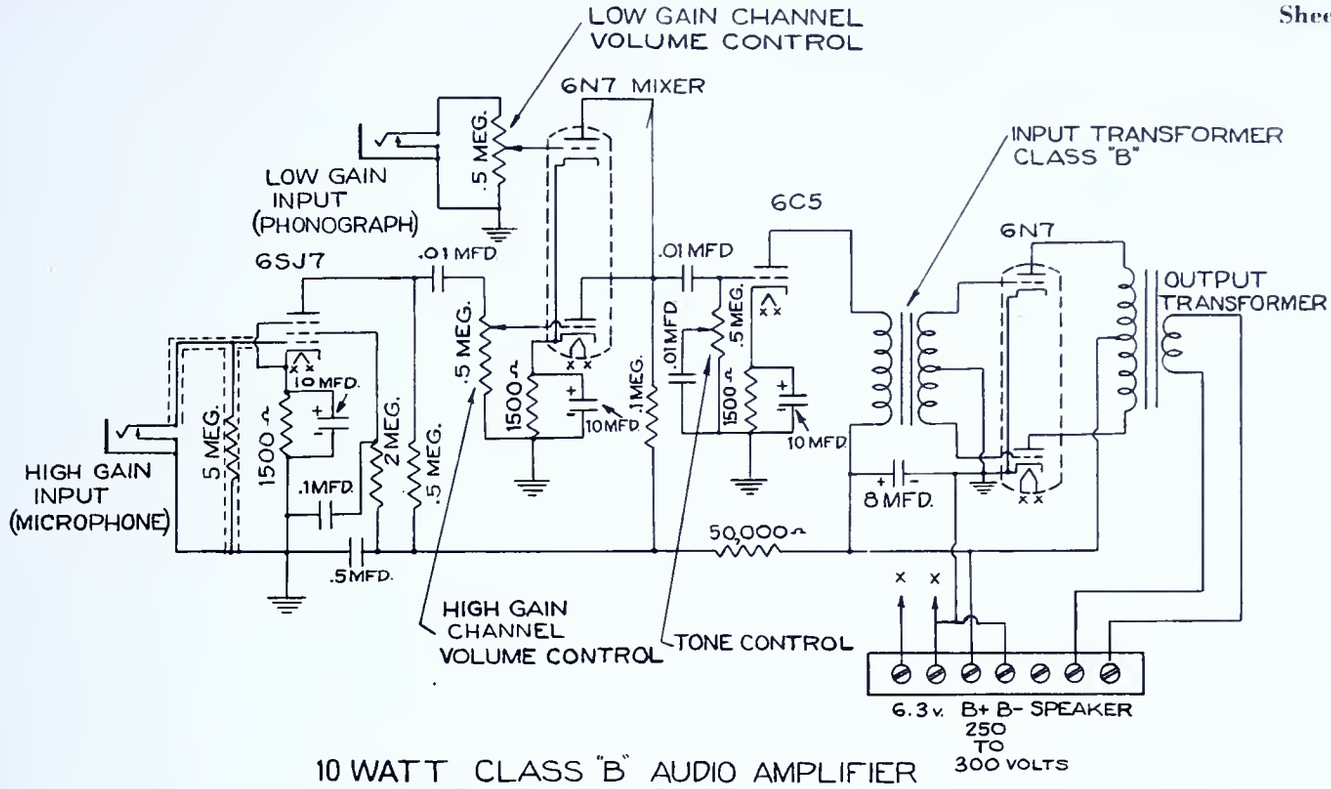

10 WATT CLASS "B" AUDIO AMPLIFIER
SCHEMATIC DIAGRAM
FIG.-5

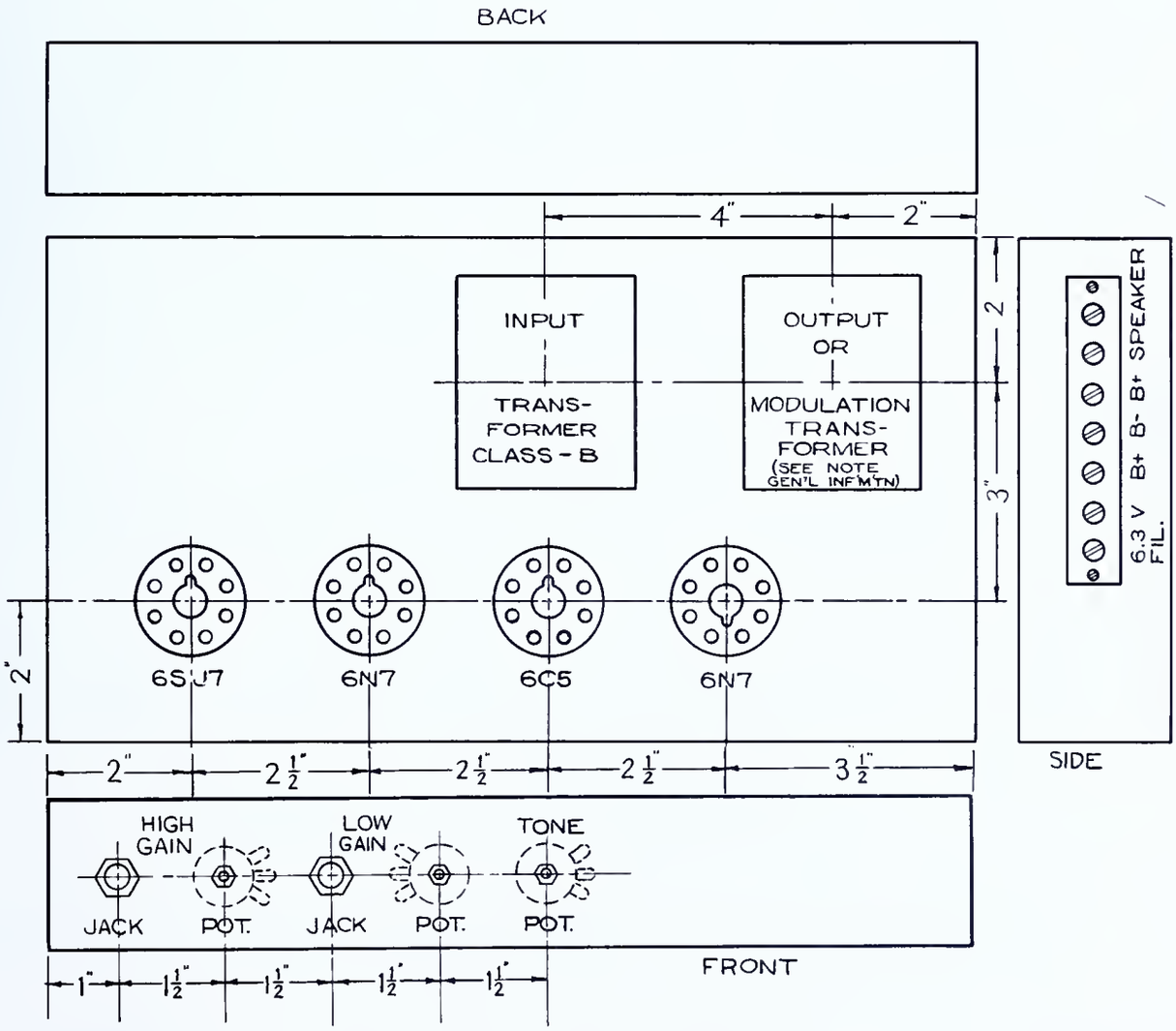

CHASSIS LAYOUT - TOP VIEW
FIG.-6

Tools needed:

1. Soldering iron
2. Long nose pliers
3. Diagonal cutting pliers
4. Socket wrenches
5. Drills
6. Punches
7. Scribe
8. Screw driver
9. Combination Square
10. Cold Chisel
11. Hammer (Machinist's)
12. Hand drill
13. Files

Equipment needed:

1. 1- 12" PM 15 watt speaker
2. 1- Crystal microphone, provided with shielded cable and plug at end of cable.
3. 1- Phonograph unit with crystal pickup, provided with shielded cable and plug at end of cable.
4. 1- Power supply
5. 2- 6N7 vacuum tubes
6. 1- 6C5 vacuum tube
7. 1- 6SJ7 vacuum tube

Materials needed:

1. 1- Chassis 7" x 13" x 2"
2. 4- Octal sockets
3. 1- Input transformer, class B (6C5 into 6N7)
4. 1- Output transformer (6N7 into speaker)
5. 3- 0.5 megohm controls
6. 3- 10 mfd. 25 w.v. capacitors (electrolytic)
7. 1- 8 mfd. 450 w.v. capacitor (electrolytic)
8. 1- 0.5 mfd. 600 w.v. paper capacitor
9. 2- Closed circuit jacks
10. 3- Knobs
11. 1- 7 terminal connecting strip, screw type
12. Tie points as required
13. 3- 1500 ohm resistors
14. 1- 5 megohm resistor
15. 1- 2 megohm resistor
16. 1- 0.5 megohm resistor
17. 1- 0.1 megohm resistor
18. 1- 50,000 ohm resistor
19. 3- .01 mfd. tubular capacitors
20. 1- 0.1 mfd. capacitor
21. Push-back wire as needed
22. Screws, nuts, and washers as needed
23. Rosin core solder

Procedure:

1. Lay out chassis as indicated in Fig. 6.

2. Drill and punch chassis.

3. Check all parts for continuity with ohmmeter.

4. Mount sockets, potentiometers, jacks and terminal strips on chassis. Be sure pin guides on sockets are in the direction indicated by chassis layout.

5. Mount input and output transformers on chassis.

6. Prepare a wiring diagram from the schematic diagram, Fig. 5, and the chassis layout, Fig. 6. Refer to tube manual for socket connections. Have instructor check wiring diagram.

7. Wire the filament circuits. Keep slight twist in wire.

8. Wire the leads from input and output transformer to corresponding terminals according to schematic diagram.

9. Wire in resistors and capacitors. Be sure polarity of electrolytic capacitors is wired as indicated by the schematic diagram. Use tie points where necessary to hold resistors and capacitors in position.

10. Wire remaining circuits. Use shielded wire to grid of 6SJ7 tube and ground the shield to jack. Be sure shielding does not short grid circuit. Resistor shielding may be omitted if resistor leads are short.

11. Solder all connections.

12. Perform a resistance analysis according to form 1 on Question Sheet. Tabulate results on copy of form in notebook. Have instructor check work.

13. Connect power supply to amplifier to furnish voltages as indicated on schematic diagram.

14. Insert tubes in amplifier. Make sure that the tubes are in the correct sockets as indicated on chassis layout.

15. Connect power supply to proper source of power and turn on. Volume controls should be in the "off" position.

16. Perform a voltage analysis according to form 2 on Question Sheet. Tabulate results on copy of form in notebook. Submit resistance and voltage readings to the instructor.

17. Connect speaker, microphone, and phonograph pickup to amplifier.

<u>Note</u>: The shielded cable of the pickup and microphone must each be connected to a plug as illustrated in Fig. 7 before the pick-up and microphone can be connected to the amplifier.

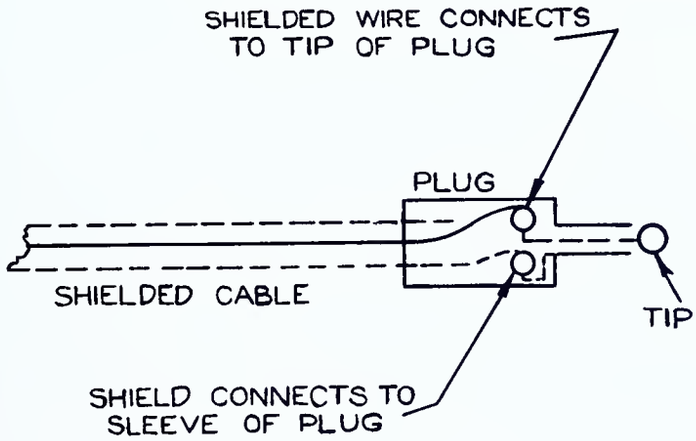

FIG.-7

18. Turn on phonograph motor and carefully place the pickup on the record.

    Caution: Handle with care as the crystal pickup is fragile.

19. Adjust high and low gain volume controls for normal volume. Speaker should not be close to the microphone or pointed at it, as acoustic feedback (howling) will result.

20. Vary the position of the tone control and observe the change in tone which results.

21. Turn unit "off". Transpose phonograph and microphone connections (phonograph to high gain input channel, microphone to low gain input).

22. Turn unit "on" and again operate. Note difference in output from each channel.

23. Disconnect apparatus and return it to stock room. Keep amplifier unit for Job 6.

    Note: In Job 7 this amplifier will be used as a modulator for the complete transmitter and will require certain wiring changes which are noted in Reference S.

QUESTIONS

Place the answers to these questions in your notebook or on form as directed by instructor.

1. What is the purpose of an audio amplifier?
2. Why are tuned circuits not used to couple tubes in an audio amplifier?
3. What is the purpose of vacuum tubes in audio amplifiers?
4. What is the difference between a voltage amplifier and a power amplifier?
5. In what part of the circuit is the voltage amplifier used?
6. Why are two input channels used in audio amplifiers?
7. What is the purpose of the potentiometer in the 6N7 grid circuit?
8. Name three methods of coupling between tubes.
9. What is an advantage of each method?
10. What is meant by class A amplification?
11. Why are two tubes used in class B power amplifier circuits?
12. How is it possible to have a phonograph and microphone operating at the same time through one amplifier?
13. How is an audio amplifier rated?
14. Why is the input wiring of the amplifier shielded?
15. How should the filament circuits be wired?
16. What are the applications of an a-f amplifier?
17. Why are input and output circuits separated on the chassis as much as possible?
18. Why are short leads used in grid and plate wiring of input circuits?
19. How many tubes are there within the envelope of the 6N7 type?
20. What form of coupling is used between power amplifier tubes and the speaker?
21. What is meant by the frequency response of an amplifier?
22. What devices are coupled to the input circuit?
23. What devices are coupled to the output circuit?
24. What is the purpose of the output transformer?
25. How is the total gain of an amplifier calculated when the gain per stage is known?
26. What is the function of the driver stage in the audio amplifier?
27. How is the efficiency of a power amplifier determined?
28. How does a variation of signal level affect the plate current of a class A amplifier? Of a class B amplifier?
29. What may be the cause of distorted reproduction?
30. What may be the cause of low output?
31. What may be the cause of instability in operation?
32. Explain the operation of the tone control in the amplifier constructed in this job.
33. Why is a transformer used to couple the 6C5 to the 6N7 power amplifier?
34. Make a list of the resistors and capacitors used in the amplifier constructed. Explain the action of each part.

References:

Everitt, W. L. et al., Fundamentals of Radio, pp. 35-37, 153-202, 231-233, 291-305.
Henney, K., Principles of Radio (Fourth Edition) pp. 259-322, 361-364, 489-498.
The Radio Amateur's Handbook (Any Edition), A. R. R. L., Chapter on Modulation.
The Radio Handbook (Any Edition), Editors and Engineers, Chapters on Radio-Telephony Theory, Speech and Modulation Equipment, Transmitter Theory, and Radio Mathematics and Calculations.

TABULATION FORMS

RESISTANCE ANALYSIS

(VOLUME CONTROLS ADVANCED TO FULL VOLUME) - Step 12

FORM 1

Points Measured	Resistance
Control grid of 6SJ7 to chassis	
Cathode of 6SJ7 to chassis	
Screen grid of 6SJ7 to B+	
Plate of 6SJ7 to B+	
Grid #1 of 6N7 mixer to chassis	
Grid #2 of 6N7 mixer to chassis	
Cathode of 6N7 to chassis	
Plate of 6N7 to chassis	
Grid of 6C5 to chassis	
Cathode of 6C5 to chassis	
Plate of 6C5 to B+	
Grid #1 of 6N7 power amplifier to chassis	
Grid #2 of 6N7 power amplifier to chassis	
Plate #1 of 6N7 power amplifier to B+	
Plate #2 of 6N7 power amplifier to B+	

VOLTAGE ANALYSIS - Step 16

FORM 2

Points Measured	Volts
Control grid of 6SJ7 to chassis	
Cathode of 6SJ7 to chassis	
Screen grid of 6SJ7 to chassis	
Plate of 6SJ7 to chassis	
Control grid #1 of 6N7 mixer to chassis	
Control grid #2 of 6N7 mixer to chassis	
Cathode of 6N7 mixer to chassis	
Plate of 6N7 mixer to chassis	
Control grid of 6C5 to chassis	
Cathode of 6C5 to chassis	
Plate of 6C5 to chassis	
Grid #1 of 6N7 power amplifier to chassis	
Grid #2 of 6N7 power amplifier to chassis	
Plate #1 of 6N7 power amplifier to chassis	
Plate #2 of 6N7 power amplifier to chassis	
B+ of terminal strip to chassis	

UNIT 6

THE AUDIO FREQUENCY OSCILLATOR

Reference N — The Audio Frequency Oscillator. Page 98

JOB SHEET 6 — THE USE OF THE AUDIO FREQUENCY OSCILLATOR. Page 100

A. Test a Loudspeaker. Page 100

B. Test an Audio Amplifier for Frequency Distortion. Page 103

Reference O — Methods of Testing an Audio Amplifier for Non-Linear and Phase Distortion. Page 107

C. Test an Audio Amplifier for Distortion by Signal Injection. Page 110

D. Test an Audio Amplifier for Distortion by Signal Tracing. Page 114

THE AUDIO FREQUENCY OSCILLATOR

General Information:

The a-f service oscillator is an instrument designed to produce an alternating voltage, the frequency of which may be varied within the audible frequency range. This instrument is sometimes called an a-f signal generator because it generates an audio frequency signal voltage. In this job the a-f oscillator is used to test an audio amplifier and a loudspeaker.

Uses

The a-f oscillator may be used for performing the following tests:

(1) Testing for distortion in audio amplifiers.
(2) Testing the frequency response of audio amplifiers.
(3) Testing the frequency response of audio transformers.
(4) Testing the amplification or gain of audio amplifiers.
(5) Testing the frequency response of speakers.
(6) Testing speakers for rattles.
(7) Testing the percentage of modulation in transmitters.
(8) Determining an unknown audio frequency.

Associated Equipment Needed

Most of the above tests necessitate the use of additional test equipment of the a-f voltage indicating type, such as:

(1) The cathode ray oscillograph
(2) The vacuum tube voltmeter
(3) The output meter section of a multimeter
(4) The loudspeaker

The loudspeaker is often used in conjunction with the V.T.V.M. or the output meter to give a qualitative indication of the signal.

In testing an amplifier the signal indicating device is connected to the output while the a-f oscillator is connected to the input. This method is called "dynamic" testing because the characteristics of the amplifier are determined while the unit is in actual operation.

Characteristics desired

It is important that the a-f oscillator have a sine wave form of voltage if it is to be used in conjunction with the oscillograph. The wave form viewed in the oscillograph at the output of the amplifier should have the same wave form as the original signal from the oscillator. Any variation in wave form indicates distortion in the amplifier.

It is also important that the voltage output of the audio oscillator be the same for every frequency that it is capable of generating. This is important when checking amplifiers and speakers for frequency response or distortion. If the output of the audio oscillator varies at different frequencies, test results will be erroneous since these variations in output will be added to the imperfection of the amplifier or speaker under test.

Internal Function

The vacuum tube is used as the signal generating device in most a-f oscillators. The simplest circuit might consist of the conventional feed-back LC or RC oscillator circuit. Different audio frequencies may be obtained by varying the value of capacity (C) in the circuit.

The beat frequency audio oscillator (BFO) is a more complicated a-f oscillator employing several tubes. In this type of a-f oscillator two tubes oscillating at radio frequencies are electrically coupled so that the two generated frequencies combine to produce an audible third beat frequency. The frequency of this signal depends on the difference between the two radio frequency signals. Thus, when the two radio frequencies are the same, zero beat is achieved and no a-f signal is generated. When the radio frequencies are 60 cycles per second apart, a 60 cycle audio frequency signal is produced. It is customary to have one r-f oscillator at a fixed frequency while the other r-f oscillator is variable in order to obtain the frequency difference necessary for the production of the a-f signal.

In addition to the two tubes used as r-f oscillators, beat frequency audio oscillators utilize tubes to combine the r-f signals, and to amplify the audio frequency signal so that it is of considerable strength at the output of the instrument.

Power to operate the tubes in most a-f oscillators is obtained from the a-c power system. A power supply in the unit produces the necessary voltages for the oscillator and amplifier tubes.

The usual beat frequency oscillator has the following controls:

(1) Calibrated dial which may be set by means of a knob to indicate a desired frequency within the audio range (30 to 15,000 cycles per second).
(2) Output control or attenuator which may be adjusted to vary the output of the instrument between zero and maximum available voltage.
(3) Power or line switch which switches on or off the a-c line power to the unit.
(4) Calibration adjustment control which sets the frequency of the oscillator to the frequency of the line voltage. A neon bulb or meter is used to indicate when the two frequencies are the same. Methods of calibration of test oscillators will vary, depending upon the particular instrument.
(5) Indicator or calibration switch which may be set for either "Calibration" or "Use" of the oscillator.

The audio frequency output of the a-f oscillator is generally available at a number of terminals. Different impedance outputs are available at the different taps. This makes it possible to match the input impedance of equipment under test.

THE USE OF THE AUDIO FREQUENCY OSCILLATOR

A. TEST A LOUDSPEAKER

General Information:

Loudspeakers used in radio work are generally of the electrodynamic type (Fig. 1A) or the permanent magnet type (Fig. 1B).

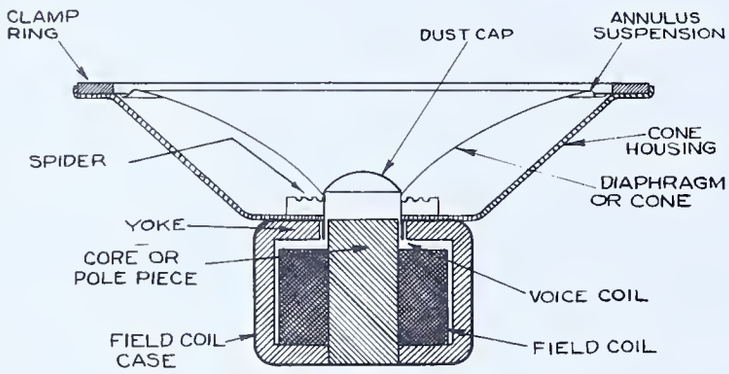

FIG.-1A

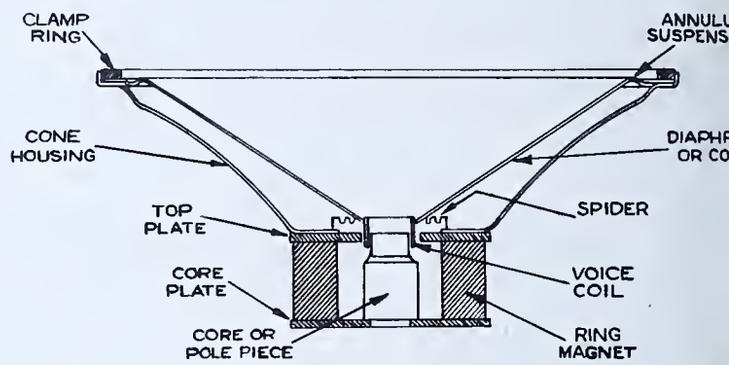

FIG.-1B

In either of these speakers a coil of wire, called the voice coil or moving coil, is attached to a diaphragm called a cone. The cone is suspended around its outer edge so that the entire cone can move backward or forward freely. The voice coil is suspended in a high flux density magnetic field supplied by an electromagnet or permanent magnet. A flexible brace, called the spider, holds the voice coil in position in the magnetic field. The position of the voice coil is critical since the magnetic field and the voice coil are located in a very narrow air gap between the pole piece and yoke of the magnet. If slightly off-center the coil will rub against the pole piece or yoke, causing a poor quality of reproduction from the speaker. One or more machine screws are generally used to hold the spider. By loosening these screws, the positio of the voice coil may be shifted so as to be perfectly centered in the air gap between pole piece and yoke. The screws may then be tightened, thus holding th voice coil in place. Some spiders are cemented in place when the speaker is assembled. A cement solvent must be used in order to loosen this type of spide The voice coil must then be re-centered and the spider cemented in position when reassembled.

The cone of the speaker is usually made of treated paper which is fragile ar must be handled carefully, or it will be torn or broken. The edge of the cone is held by a metal or cardboard ring cemented or riveted to the frame of the speaker. If the cement at this point breaks or the ring becomes loose, the speaker will rattle when operated. This necessitates cementing the edge of the cone again or tightening the ring to the frame.

Care must be taken to keep dirt and iron filings away from loudspeakers. These particles may become wedged in the air gap of the speaker and cause distorted reproduction. Dust caps are often used to enclose the air gap, thus preventing this trouble.

Specifications:

1. Check a permanent magnet (PM) speaker for frequency response and rattles.
2. Construct (or secure from stock) a shielded cable with plug connected to one end as illustrated in Fig. 2.

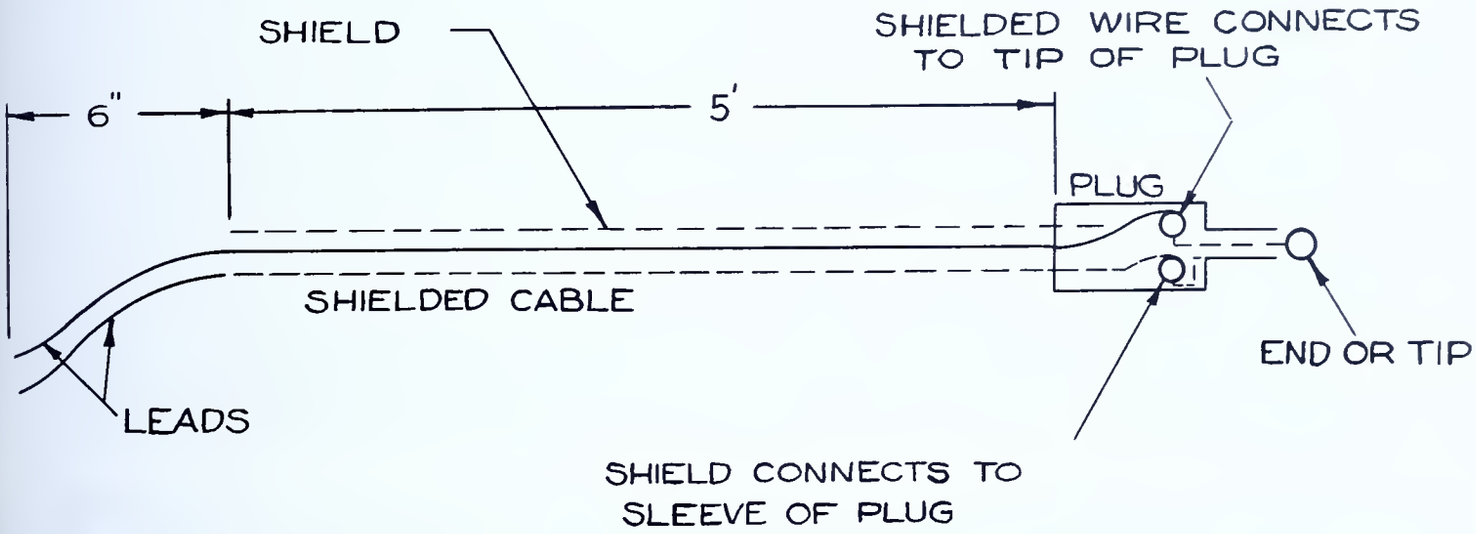

FIG.-2

Tools needed:

1. Soldering iron
2. Long nose pliers
3. Diagonal cutting pliers
4. Screw driver

Equipment needed.

1. Beat frequency audio oscillator
2. Audio amplifier, complete as constructed in Job 5.
3. Power supply.

Materials needed:

1. Wire
2. Solder
3. 12" PM speaker
4. Baffle for speaker (this may be a cabinet or a large board with a 10" hole in the middle)
5. Single conductor shielded cable
6. Plug (phone)

Procedure:

Note: The instruction manual for operation of BFO should be read before doing this job.

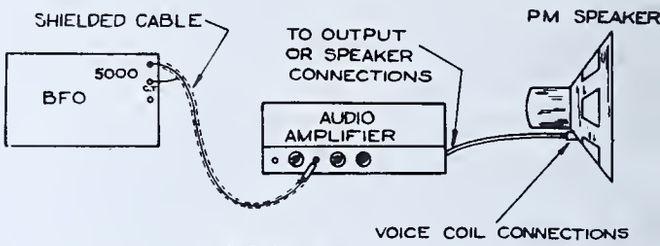

FIG. 3

1. Prepare cable with plug connected to one end as indicated in Specifications, Fig. 2.

2. Connect apparatus as indicated in Fig. 3. The high impedance output of the oscillator is connected to the low gain input of the audio amplifier by means of a shielded cable. The output of the audio amplifier is connected to the voice coil terminals of the PM speaker.

3. Connect the power supply to the audio amplifier to supply the necessary voltages.

4. Connect the audio oscillator and power supply to the a-c supply. Turn this equipment "on". Allow 10 minutes for oscillator to reach normal operating temperature.

5. Adjust the calibration of the audio oscillator according to the instruction manual for that unit.

6. Adjust the dial of the BFO for a 30 cycle note.

7. Adjust the output control of the audio oscillator and the low gain channel volume control of the amplifier to obtain a loud signal in the speaker.

   Notice whether the tone from the speaker is clear or if it sounds fuzzy or distorted.

8. Turn dial of BFO slowly toward the high frequency end of scale.

   Notice how the sound from the speaker increases in pitch as the dial is turned. Tone from the speaker should be clear for all frequencies. A rattle or distorted tone at any pitch indicates a defective speaker.

9. Place the speaker on a suitable baffle.

10. Repeat Steps 6, 7, and 8.

    Notice the difference in tone when speaker is mounted on the baffle.

11. If the speaker rattles at any frequency, examine it carefully to determine if the voice coil is touching the pole piece as the cone is moved in and out by hand. Examine also for a loose edge. Secure instructor's aid for the adjustment or repair of the unit. Handle the speaker with care.

12. Turn off the equipment. Return the PM speaker to the stock room. Keep other equipment for the next job.

B. TEST AN AUDIO AMPLIFIER FOR FREQUENCY DISTORTION

General Information:

Frequency distortion is one of three types of distortion that may occur in audio amplifiers; the other two types being non-linear (amplitude or harmonic) distortion and phase distortion. Frequency distortion results when signals of some frequencies are amplified more than signals of other frequencies. Usually the signals within the middle range of audio frequencies are amplified to a greater extent than are those at the extreme high or low frequency ends of the audible range.

In checking for frequency distortion, a cathode ray oscillograph (CRO) is connected to the output of the amplifier while a beat frequency oscillator (BFO) is connected to the input. The BFO supplies the a-f signal to the amplifier while the CRO measures the amplified signal voltage at the output of the amplifier. If the voltage indicated at the output of the amplifier is constant for all the different audio frequencies generated by the BFO, no frequency distortion is present.

When the amplifier output is connected to the vertical terminals of the CRO and no timing voltage is used, a vertical line on the screen of the CRO indicates the amplitude of the a-f voltage. See Fig. 4.

By measuring the length of the line on the screen indicating relative amplification for several different BFO frequencies, a value may be obtained for each frequency which will make possible the plotting of a graph, showing the frequency response or distortion of the amplifier. The relative amplification would be indicated along the vertical reference line of the graph. The audio frequencies would be indicated along the horizontal reference line. The divisions of this line should be logarithmic in scale since sound is indicated by a logarithmic ratio. See Fig. 5. A graph curve that is flat illustrates little frequency distortion. One that is humped or uneven illustrates frequency distortion. The amount of distortion is indicated by the number and extent of the deviations of the response "curve" from a straight line.

Many amplifiers are designed to have a special frequency response which may indicate frequency distortion. It is sometimes necessary in thoroughly testing an amplifier to prepare a response curve which is compared to a normal one supplied by the manufacturer. Any discrepancy between the curves illustrates some defect in the operation of the amplifier tested.

Specifications:

Determine the frequency distortion of the audio amplifier built in Job 5 by using the BFO and the CRO to make output measurements at the various input frequencies indicated in Procedure.

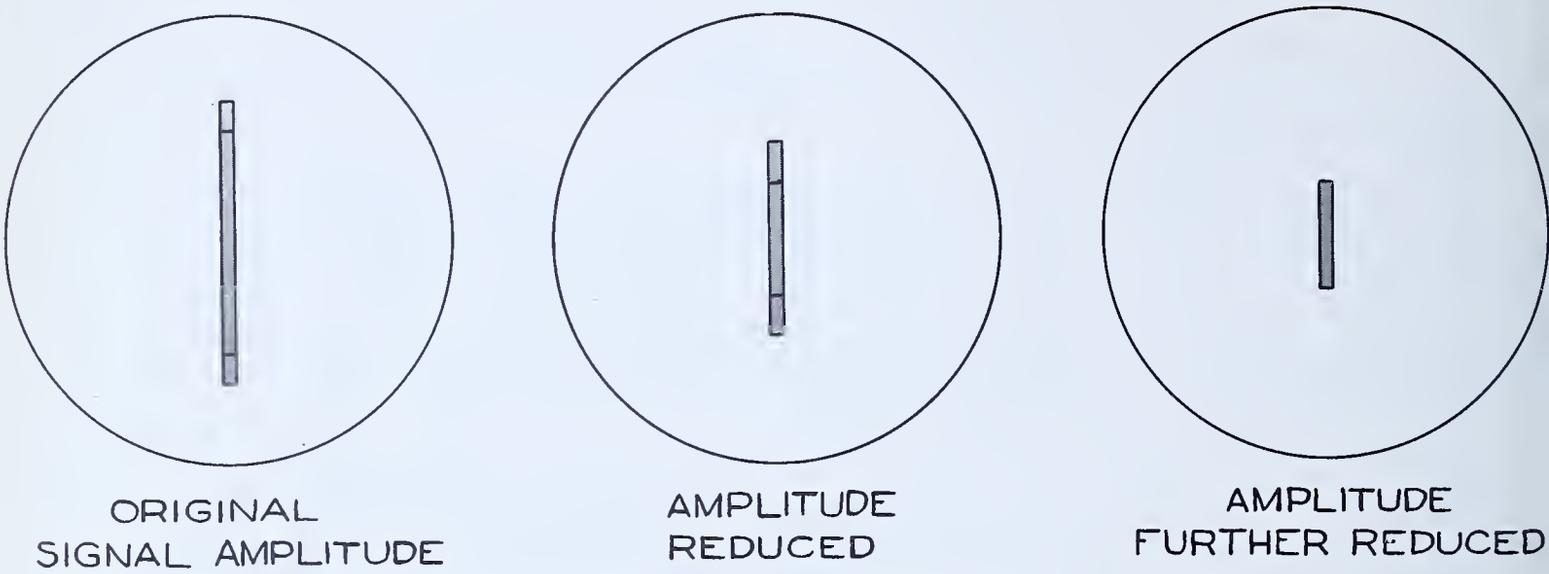

FREQUENCY DISTORTION
FIG.- 4

Tools needed:

1. Screw driver
2. Rule

Equipment needed:

1. Beat frequency audio oscillator
2. Audio amplifier constructed in Job 5
3. Power supply
4. Cathode ray oscillograph

Materials needed:

1. Shielded cable as prepared in Job 6A
2. 1- 10 ohm 10 watt resistor
3. 1- Set of test leads

Procedure:

Note: In using the CRO do not permit a line or spot of great intensity to remain stationary on the screen.

1. Connect BFO (beat frequency oscillator), oscillograph, and audio amplifier as follows:

   a. Output of audio amplifier to the vertical terminals of the oscillograph.
   b. The 10 ohm resistor across the vertical terminals of the oscillograph.
   c. Plug of the shielded cable to the high gain input of the audio amplifier.
   d. Other end of the shielded cable to the 5000 ohm output of the audio oscillator.

2. Adjust the BFO to 50 cycles. Set the output control for a very small output (retarded but not off.)

3. Connect to a-c line and turn on:- the amplifier, the oscillator, and the oscillograph.

4. Set the controls of the oscillograph to obtain a vertical line on the screen. Obtain instructor's help for this operation which is outlined as follows:

   a. Turn the vertical amplifier switch of the oscillograph to the "on" position.
   b. Adjust the high gain channel volume control on the audio amplifier and the vertical amplifier gain control on the CRO to make the line about 2/3 the height of the CRO screen.
   c. Turn the horizontal amplifier timing switch to the "off" position.
   d. Set tone control of amplifier to the "high" position.

5. Measure the height (top to bottom, not merely to base line) of the vertical line on the screen of the CRO, using a ruler. Record the measurement in notebook.

   Note: Do not change the gain controls of the amplifier, oscillograph, or the output control of the BFO after they are once set.

6. Set the dial of the BFO to each of the following frequencies. Measure and record in notebook the length of the vertical line on the oscillograph for each of the following settings of the BFO:

a.	50	cycles per second
b.	100	cycles per second
c.	250	cycles per second
d.	500	cycles per second
e.	1,000	cycles per second
f.	2,500	cycles per second
g.	5,000	cycles per second
h.	10,000	cycles per second
i.	15,000	cycles per second

7. Remove the plug from the high gain channel input of the audio amplifier and insert the plug into the low gain channel input.

8. Set the audio oscillator for 50 cycles.

9. Adjust the low gain channel volume control to set the height of the line to the same distance as was recorded in Step 5.

10. Again set the frequency control dial to the various frequencies as in Step 6 and record length of vertical line for each setting.

11. Set tone control to "deep" or "bass" position.

12. Set oscillator for 50 cycles and repeat Step 10.

13. Turn off apparatus.

14. Copy the graph form, Fig. 5, labeling the frequencies along the horizontal reference line and inches along the vertical reference line. Note that this is a logarithmic graph form, since sound levels are indicated according to a logarithmic ratio.

15. Make one curve on this graph for the values obtained in Step 6. Label this curve "High gain channel".

16. Make another curve on the same piece of graph paper for values obtained from Step 10. Label "Low gain channel".

17. Make another curve on the same piece of graph paper for values obtained in Step 12. Label "Bass position tone control".

18. Disconnect apparatus and return it to stock room.

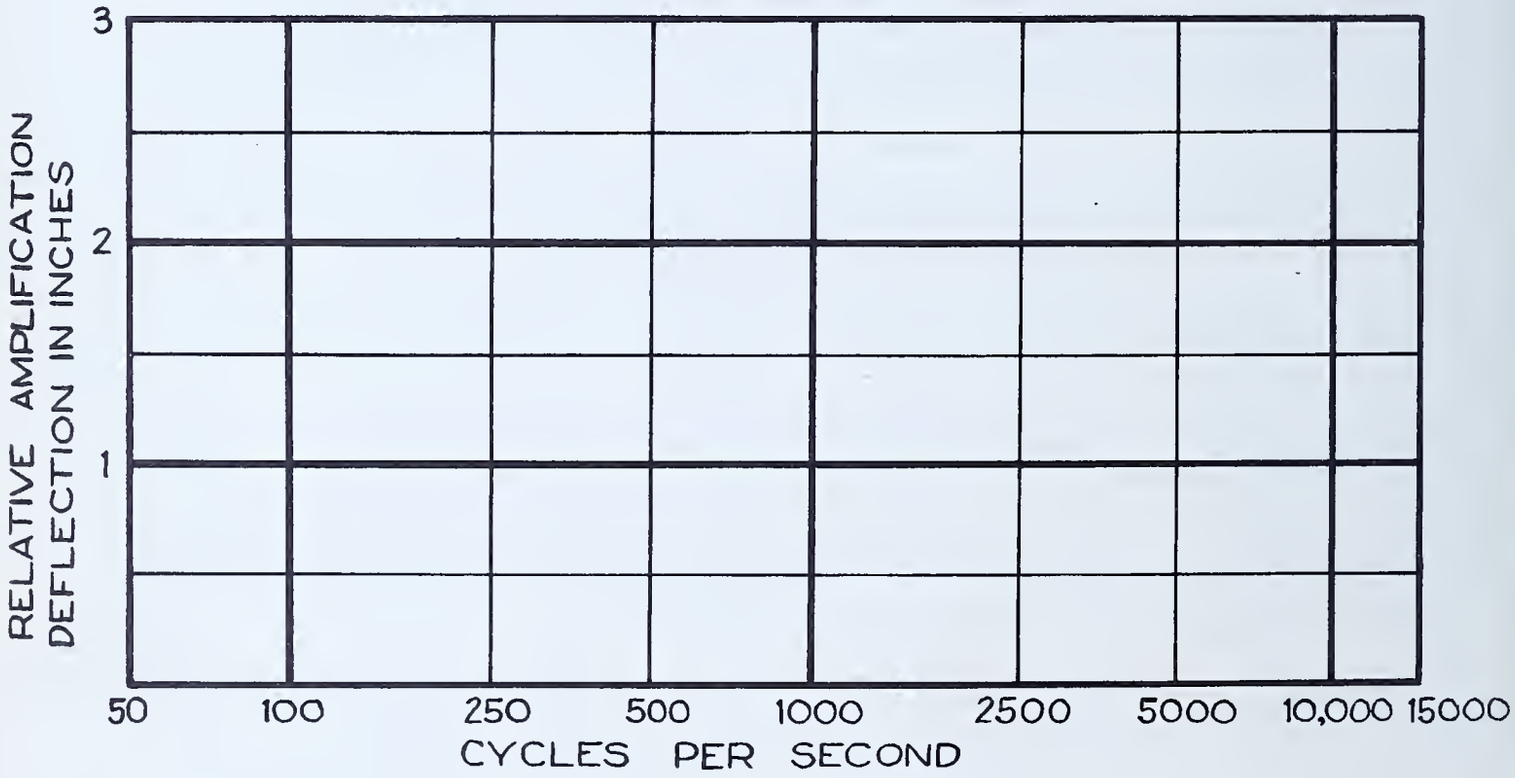

FIG.-5

METHODS OF TESTING AN AUDIO AMPLIFIER FOR NON-LINEAR AND PHASE DISTORTION

General Information:

Non-linear (amplitude or harmonic) distortion results from the vacuum tubes in the amplifier working on non-linear portions of their characteristic curve. This may be caused by the tube operating with incorrect grid bias or by too large a signal being applied to the tube. In checking a particular amplifier tube for non-linear distortion, the following general procedures may be used:

I. Signal injection - In this method of testing, the CRO is connected to the output of the amplifier, and the signal is injected at different points in the amplifier circuit, proceeding from the output toward the input. The general procedure for such tests is as follows:

(1) Connect the CRO to the output of the amplifier.
(2) Connect the BFO to the plate or output circuit of the last stage.
(3) Determine the wave form of signal voltage with the BFO connected as in (2).
(4) Connect the BFO to the grid or input circuit of the last stage.
(5) Determine the wave form of signal voltage with the BFO connected as in (4).
(6) Repeat above procedure for each stage, proceeding from the output to the input.

If the symmetry of the wave form does not vary between Steps (3) and (5), no non-linear distortion is apparent. Any change in symmetry indicates wave form distortion due to non-linear operation of the tube in that stage.

Since there is amplification due to the tube, the amplitude of the wave form will be greater when the BFO is connected to the grid circuit than when it is connected to the plate circuit. This must be compensated for by retarding the vertical amplifier gain control on the CRO, or by retarding the output attenuator on the BFO until the wave form is of the same height when the BFO is connected to the grid circuit as when it was connected to the plate circuit.

II. Signal tracing - In this method the BFO is connected to the input of the amplifier, and the CRO is successively connected to different points proceeding from the input toward the output, and thereby "tracing" the signal throughout the whole amplifier. The general procedure for such tests is as follows:

(1) Connect the BFO to the input of the amplifier.
(2) Connect the CRO to the grid of the tube in the first stage.
(3) Determine the wave form of the signal voltage at this point.
(4) Connect the CRO to the plate of the tube in the first stage.
(5) Determine the wave form of the signal voltage at this point.
(6) Repeat above procedure for each stage proceeding from the input to the output.

The symmetry of the wave form pattern should be the same for Steps (3) and (5). Any change indicates non-linear distortion. See Fig. 6.

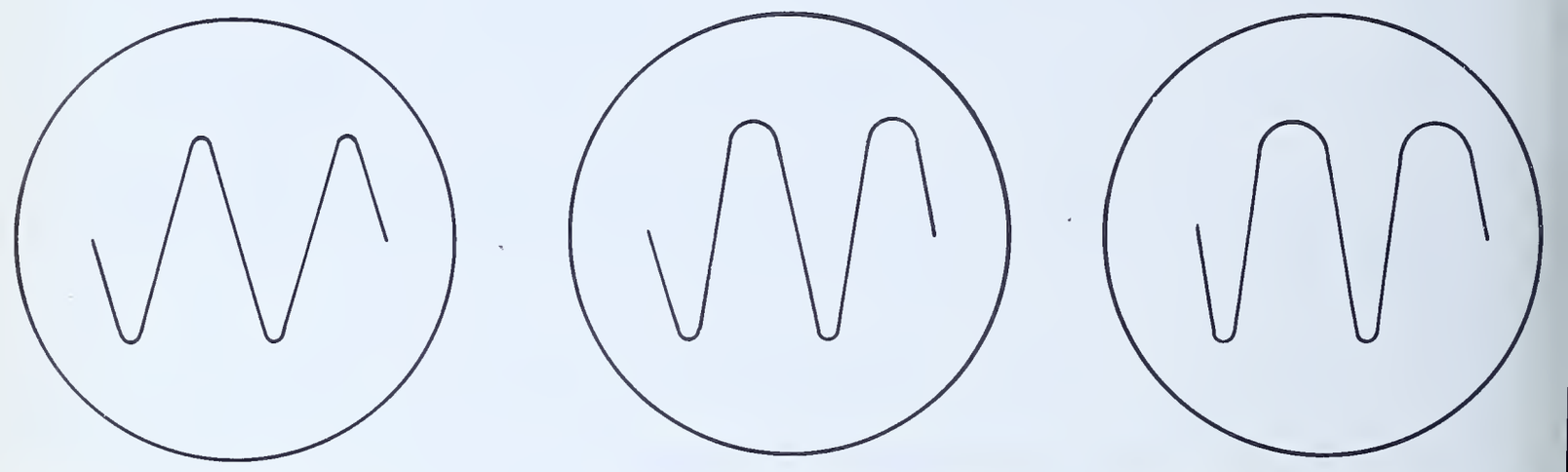

NON-LINEAR DISTORTION

FIG.-6

Phase distortion is due to some frequencies passing through a circuit with greater speed than others. Many audio frequency voltages are not pure sine waves but contain harmonics as well as the fundamental frequency. If the harmonics and fundamental are traveling at different rates in the circuit, they will appear at the output at different times and one is said to be "delayed" in relation to the other. The wave form at the output of that circuit will be of different shape than that at the input even though the relative amplitude of the fundamental and harmonics remains constant. This form of distortion is called phase or time delay distortion.

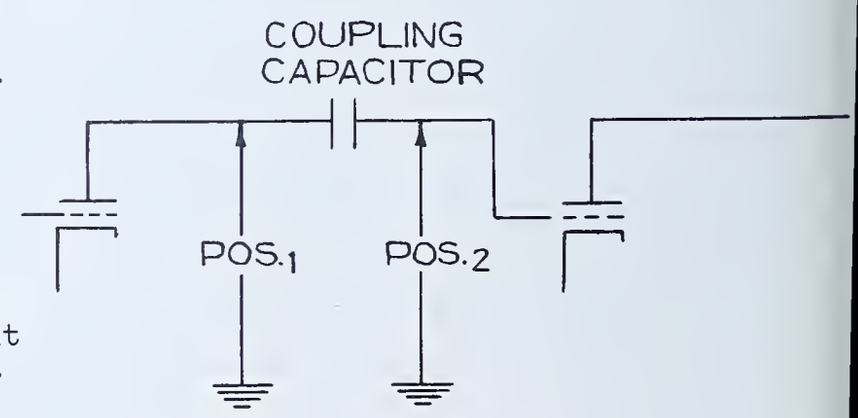

FIG.-7

To test for this form of distortion, the BFO is connected to the input of the amplifier to supply a signal voltage. The CRO is connected to the plate circuit of one of the amplifier tubes as shown by Pos. 1, Fig. 7. The wave form of the signal voltage is determined at this point. The CRO is then connected to the grid circuit of the following amplifier tube. Pos. 2, Fig. 7 and the wave form is again checked. Any difference in wave form following this shifting of the connection of the CRO indicates phase distortion due to the coupling capacitor. See Fig. 8.

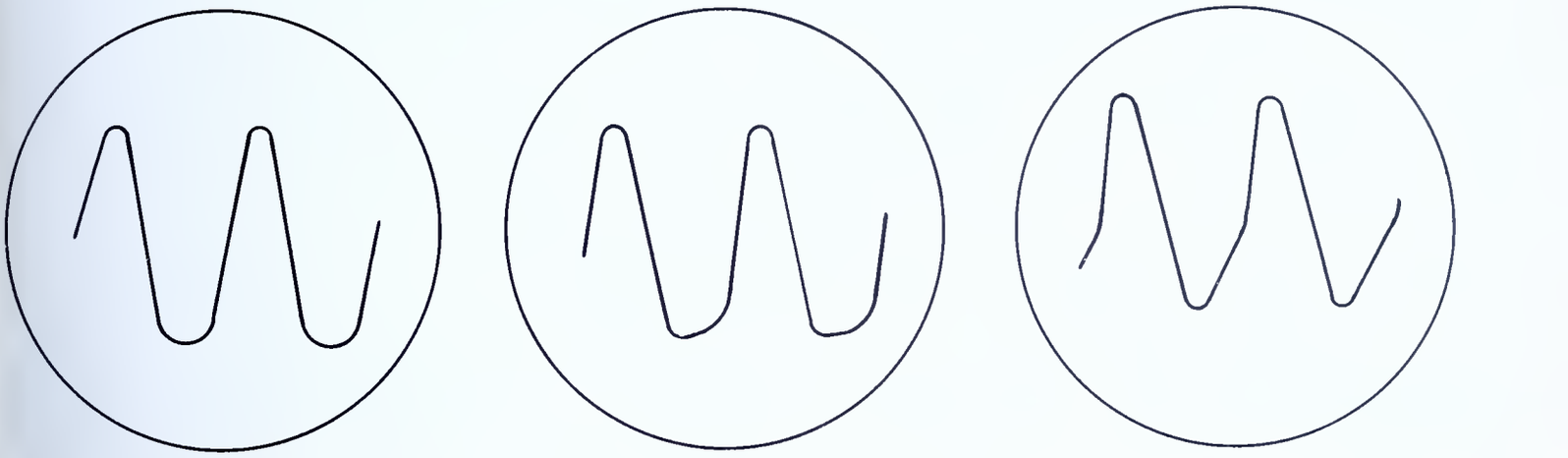

ORIGINAL WAVE FORM DISTORTED WAVE WAVE FURTHER DISTORTED

FIG.-8

PHASE DISTORTION

C. TEST AN AUDIO AMPLIFIER FOR DISTORTION BY SIGNAL INJECTION

General Information:

The audio oscillator and cathode ray oscillograph are used in this job to test the audio amplifier for frequency and phase distortion by the signal injection method.

Various circuit failures to introduce distortion are made in the amplifier during the testing procedure, thus permitting the trainee to observe such effects.

Specifications:

Test each stage of the audio amplifier for non-linear and phase distortion by the signal injection method.

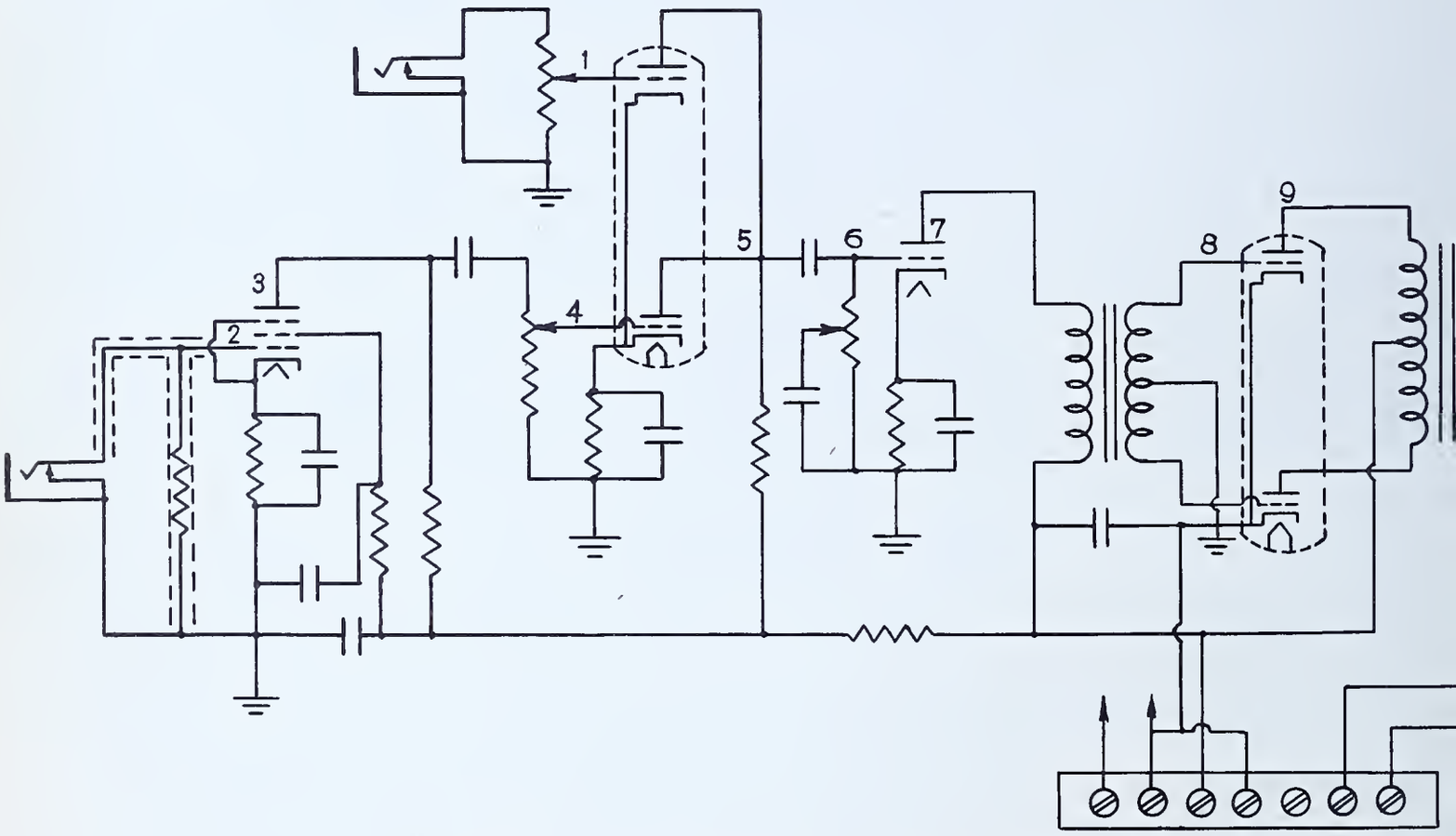

10 WATT CLASS "B" AUDIO AMPLIFIER
SCHEMATIC DIAGRAM
FIG.-9

Tools needed:

1. Screw Driver

Equipment needed:

1. Beat frequency audio oscillator
2. Audio amplifier
3. Power supply
4. Cathode ray oscillograph

Materials needed:

1. Fahnestock clip
2. Shielded test lead
3. 2- 0.1 mfd. paper capacitors
4. Shielded cable as previously prepared.
5. Plug for input jack.

Note: The tools, equipment and material of this job will also be used for Job 6D.

Procedure:

Note: The height of the wave form should be kept constant throughout the procedure by adjusting the vertical amplifier gain control when necessary.

1. Connect a 0.1 mfd. capacitor in series with the shielded test lead and the 5000 ohm output terminal of the BFO as illustrated in Fig. 10. The shield of the test lead must be connected to the chassis of the amplifier by means of a flexible wire, long enough to permit free action of the prod of the test lead.

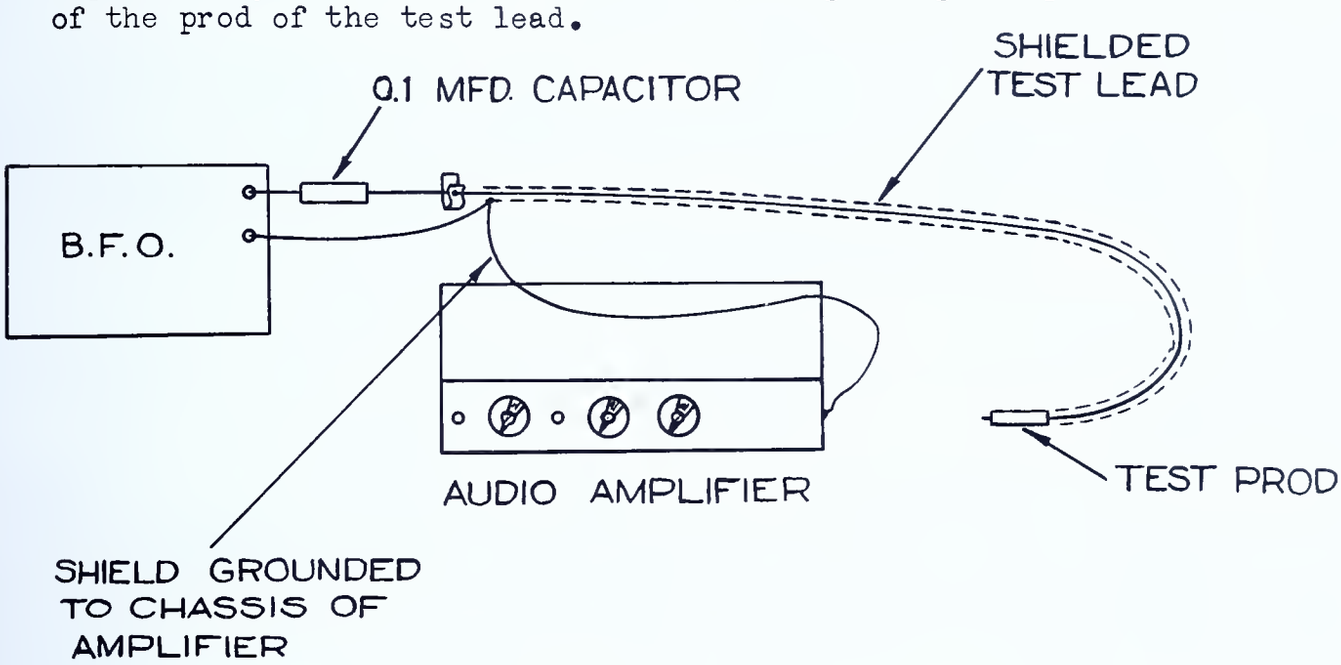

FIG.-10

2. Connect the 5000 ohm output of the BFO to the vertical terminals of the oscillograph as follows:

   a. Connect the prod of the shielded test lead to the top terminal of the vertical amplifier input on the oscillograph.
   b. Connect another test lead between the zero output connection of the BFO and the bottom terminal of the vertical amplifier input on the oscillograph.

3. Connect the BFO and the oscillograph to the a-c line and turn them on.

4. Set the BFO for a 400 cycle signal. Adjust the output control to the number one position.

5. Adjust the oscillograph for a two cycle pattern on the screen. Secure instructor's help if necessary.

6. Sketch the pattern obtained on the CRO screen in notebook. This pattern represents the wave form of the output of the BFO and is used as a reference pattern.

7. Turn off the power switches of the BFO and the oscillograph.

8. Remove the connections to the vertical posts of the oscillograph.

9. Connect the output of the audio amplifier to the vertical posts of the oscillograph. Also connect the 10 ohm resistor across the vertical terminals of the oscillograph.

10. Connect the test lead from the zero or C.T. terminal of the BFO to the chassis of the amplifier.

11. Connect the prod of the shielded test lead from the BFO to the plate of the 6C5 tube. (Point 7, Fig. 9).

    Note: The points indicated by number on the schematic diagram (Fig. 9) are used for the rapid identification of circuits in this job. Numbering would not be found on a commercial schematic diagram; the general procedure and sequence of testing, as given in Reference O must be thoroughly understood to test any amplifier.

12. Connect the power supply of the audio amplifier to a-c line.

13. Turn on the power switches in the power supply, BFO, and oscillograph.

14. Adjust oscillograph to obtain again a two cycle pattern. Sketch pattern of wave form in notebook. Any difference between the wave form of pattern obtained in this step and the one sketched in Step 6 indicates distortion in the 6N7 stage.

15. Connect the prod of the shielded test lead to the grid of the 6C5 tube. (Point 6, Fig. 9).

    Note: The height of the wave form pattern must be kept constant throughout this entire job. This is done by adjustment, when necessary, of the output attenuator of the BFO or the vertical amplifier gain control of the CRO.

16. Sketch the pattern obtained on the screen in notebook. Note any change in symmetry of pattern. Change in symmetry indicates non-linear distortion.

17. Short the 1500 ohm resistor connected between the cathode of the 6C5 tube and chassis. A piece of wire or a test lead may be used to make this short. Do not permit this short to remain for any great length of time. Notice how the pattern changes when resistor is shorted. The change in pattern indicates non-linear distortion due to the bias being removed from the tube. This causes the tube to work on a non-linear portion of its characteristic curve.

18. Remove short from cathode resistor.

19. Connect the prod of the shielded test lead to plate of 6N7 mixer tube. (Point 5, Fig. 9).

20. Make a sketch in notebook of the new pattern on screen. Any change in pattern illustrates phase distortion caused by the .01 mfd. coupling capacitor.

21. Connect the prod of the shielded test lead to the arm of the volume control. (Point 4). Turn volume controls to maximum position.

22. Adjust the output attenuator of the BFO or the vertical gain control of the oscillograph to keep the height of the pattern constant.

23. Make a sketch in notebook for the new pattern on screen. Any change in pattern illustrates non-linear distortion in the 6N7 mixer tube.

24. Short the 1500 ohm resistor connected between cathode of 6N7 tube and chassis. Note the change in wave form of the pattern on the screen. This change illustrates non-linear distortion.

25. Remove the short across the cathode resistor.

26. Connect the prod of the shielded test lead to plate of the 6SJ7 tube (Point 3).

27. Make a sketch in notebook for the pattern on the screen. Any change in pattern illustrates phase distortion caused by the .01 mfd. coupling capacitor.

28. Shunt a 0.1 mfd. capacitor across the .01 mfd. capacitor. Note the effect on the wave form pattern on the CRO screen. Remove the 0.1 mfd. capacitor.

29. Connect the prod of the shielded test lead to the grid of 6SJ7 tube (Point 2). Insert an open plug in the high gain channel input jack.

30. Adjust the output attenuator of the BFO or the vertical gain control on the oscillograph to keep the height of the pattern on the screen constant.

31. Make a sketch in notebook for the pattern on the screen. Any change in the pattern illustrates non-linear distortion in the 6SJ7 stage.

32. Short the 1500 ohm resistor connected between cathode of the 6SJ7 tube and chassis. Note any change in wave form of the pattern on the screen of the oscillograph. The change illustrates non-linear distortion due to lack of bias on the tube.

33. Connect the prod of the shielded test lead to the arm of low gain channel volume control (Point 1). Insert the open plug in the low-gain channel jack.

34. Adjust the vertical amplifier gain control on the oscillograph to keep the height of the wave form constant. Note any change in symmetry of the pattern on the screen.

35. Keep equipment for next job.

D. TEST AN AUDIO AMPLIFIER FOR DISTORTION BY SIGNAL TRACING

Specifications:

Test the audio amplifier for frequency and phase distortion by the signal tracing method, using the audio oscillator and cathode ray oscillograph.

Procedure:

1. Connect the 5000 ohm output of BFO to high gain input of amplifier by means of the shielded cable with attached plug.

2. Connect a wire from the bottom vertical terminal of the CRO to the chassis of the amplifier.

3. Attach the lug end of the shielded test lead to the top vertical terminal of the CRO through the 0.1 mfd. capacitor. See Fig. 11.

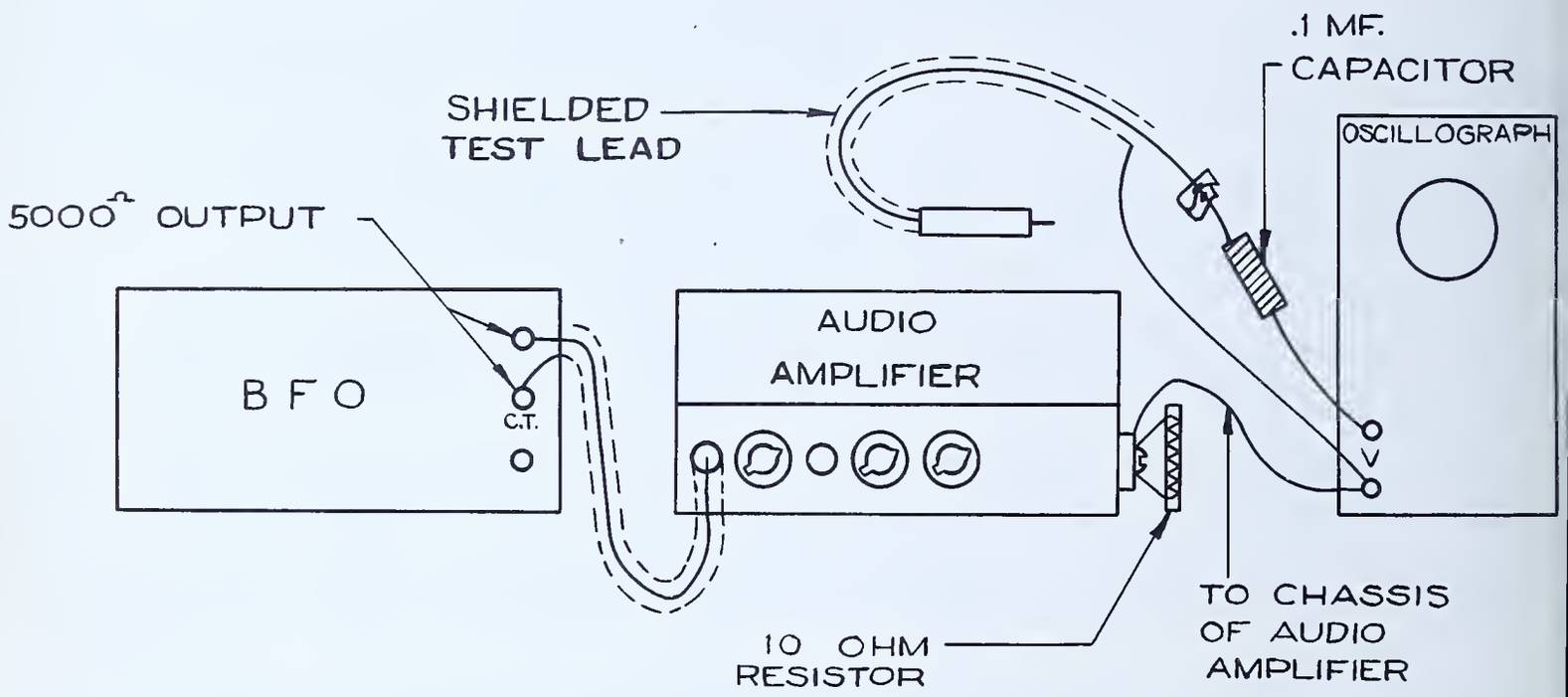

FIG.-11

4. Attach a wire from the shield of the test lead to the bottom vertical terminal of the CRO.

5. Connect the BFO, the CRO and the power supply of the amplifier to a-c line and turn them on.

6. Set the BFO for a 400 cycle note.

7. Set the output attenuator of the BFO to half scale.

8. Connect the prod of the shielded test lead to grid of 6SJ7 tube (Point 2, Fig. 9).

9. Adjust the controls of the CRO to obtain two cycles of the 400 cycle signal on the screen. Proceed as follows:

   a. Set horizontal amplifier to timing-internal-position.
   b. Set range and frequency controls for 200 cycles.
   c. Turn vertical amplifier to "on" position and adjust horizontal amplifier gain control to spread the wave form properly.
   d. Adjust vertical amplifier gain control until the height of the wave form is two-thirds of screen.

10. Draw a sketch in notebook of the wave form obtained on the screen of the CRO.

11. Connect prod of the shielded test lead to plate of 6SJ7 tube. (Point 3).

12. Retard output attenuator of the BFO to make height of wave form the same size as obtained in Step 10.

13. Sketch wave form. Any change in symmetry of wave form indicates non-linear distortion.

14. Connect prod of shielded test lead to arm of high gain channel volume control (Point 4). Advance to maximum the high gain volume control of audio amplifier.

15. Sketch wave form. Any change in symmetry of wave form between the pattern obtained in Step 13 and this step indicates phase distortion.

16. Connect the prod of the shielded test lead to plate of 6N7 mixer tube. (Point 5).

17. Decrease output attenuator of BFO or the vertical amplifier gain control of CRO to reduce wave form pattern to normal height.

18. Sketch wave form. Any change in symmetry of wave form indicates non-linear distortion.

19. Connect the prod of the shielded test lead to grid of 6C5 tube. (Point 6).

20. Sketch wave form. Any change in symmetry of pattern indicates phase distortion caused by the .01 mfd. coupling capacitor.

21. Connect the prod of the shielded test lead to plate of 6C5 tube (Point 7).

22. Reduce the vertical amplifier gain control on the CRO to adjust the height of the wave form pattern to normal.

23. Sketch wave form. Any change in symmetry of wave form now illustrates non-linear distortion caused by the 6C5 tube.

24. Connect the prod of the shielded test lead to grid of 6N7 power amplifier tube (Point 8).

25. Sketch wave form. Any change in symmetry of pattern indicates distortion caused by the input transformer.

26. Connect the prod of the shielded test lead to plate of 6N7 power amplifier tube (Point 9).

27. Retard the output attenuator of the BFO or the vertical amplifier gain control of the CRO to keep the height of the wave form normal.

28. Sketch wave form. Any variation in symmetry of wave form pattern indicates distortion caused by the 6N7 tube.

29. Connect secondary of the output transformer to the vertical terminals of CRO. The 10 ohm resistor must remain connected to the output of the amplifier.

30. Increase the vertical gain control to make the wave form pattern of normal height.

31. Sketch wave form. Any variation in symmetry of the wave form illustrates distortion caused by the output transformer.

32. Turn off and disconnect apparatus.

33. Return equipment to stock room.

QUESTIONS

Place the answers to these questions in your notebook or on form as directed by instructor.

1. What is the purpose of the a-f oscillator?
2. Name eight tests which may be performed by means of the audio oscillator.
3. What equipment is used to supplement the BFO in testing radio apparatus?
4. To which circuit of the tested equipment is the audio oscillator usually connected?
5. What should be the type of wave form of a good audio oscillator?
6. Why should the voltage output of the a-f oscillator be the same for different frequencies?
7. Name two types of feed-back circuits which may be used in the a-f oscillator.
8. How is the frequency generally varied in oscillator circuits?
9. Explain the operation of the BFO.
10. How was the BFO oscillator calibrated?
11. What is the principle difference between the PM and electro-dynamic speakers?
12. What is the purpose of the spider in the PM or electro-dynamic speaker?
13. What care must be exercised in handling and using loudspeakers?
14. Did the sound from the loudspeaker become louder or weaker when the baffle was used?
15. Name three types of distortion which may occur in audio amplifiers.
16. Which types of distortion can be represented by a graph curve?
17. What is the difference between signal injection and signal tracing?
18. Which type of distortion was determined by connecting the CRO between chassis and one side of the coupling capacitor and then between chassis and the other side of the coupling capacitor?
19. What frequencies were amplified most in the amplifier tested?
20. In which stage of the amplifier was the greatest amount of distortion detected?
21. Why does shorting a cathode bias resistor cause distortion? Which type of distortion does this effect?
22. What adjustments were necessary to keep the height of the CRO pattern constant when the test prod was connected to the plate of a tube from the grid of a tube?
23. Which type of distortion is introduced by advancing the volume control of the amplifier to maximum and using a strong input signal?

References:

Everitt, W. L. et al., Fundamentals of Radio, pp. 153-155, 175-185, 203-206.
Henney, K., Principles of Radio (Fourth Edition), pp. 239-258, 477-478
The Radio Amateur's Handbook (Any Edition), A. R. R. L., Chapters on Electrical and Radio Fundamentals, Measurements and Measuring Equipment.
The Radio Handbook (Any Edition), Editors and Engineers, Chapters on Vacuum Tube Theory, Test and Measuring Equipment.

UNIT 7

THE USE OF THE CATHODE RAY OSCILLOGRAPH FOR TRANSMITTER MEASUREMENTS

Reference P — Principles of Modulation. Page 120

Reference Q — How to Construct a Triple Section Power Supply. Page 127

Reference R — How to Construct an Antenna Coupler. Page 129

Reference S — Conversion of the Audio Amplifier to a Modulator Unit. Page 131

Reference T — The Assembly of the Units of a Transmitter. Page 133

Reference U — Checking the Modulation of a Transmitter. Page 136

JOB SHEET 7 — CHECK THE TRANSMITTER FOR MODULATION, CARRIER HUM, AND DISTORTION. Page 139

A. Check and Adjust Transmitter for Modulation. Page 139

B. Check Transmitter for Carrier Hum. Page 142

C. Check Transmitter for Distortion. Page 145

PRINCIPLES OF MODULATION

General Information:

The radio frequency oscillator, when properly coupled to an antenna supplies a signal (carrier) which is radiated by the antenna into space. The signal may be picked up by a receiver connected to another antenna system.

No information or intelligence can be transferred successfully by the oscillator (a simple transmitter) to the receiver, unless some variation in (modulation of) the signal from the transmitter is provided.

This variation in the signal is called modulation and may be accomplished as follows:

(1) The r-f signal may be started or stopped by means of a key, producing signals which are called code. This "keying" of the carrier permits either full amplitude or none. The keying method is also referred to as continuous-wave (c. w.) transmission. Code signals can be used to cover great distances with relatively small power.

(2) The r-f signal may be combined with an audio frequency signal in such a way that the a-f signal increases or decreases the amplitude of the r-f signal. This method of modulation is the one usually referred to as "amplitude modulation".

(3) The a-f signal may be combined with an r-f signal in such a way that the a-f signal varies the frequency of the r-f signal. This is known as frequency modulation.

Frequency modulated signals require relatively complicated transmitting and receiving apparatus and can be received or transmitted over definitely limited distances because of the high frequencies employed. These disadvantages are partly offset by the improved quality of the received sound in a well designed unit of this type.

The amplitude modulated transmitter is the most common and popular type in use today for conveying speech and music. This transmitter can be used for generating signals that may be transmitted and received over great distances, but requires more power than for code signals.

The simplest amplitude modulated transmitter would employ two tubes. One tube would function as an r-f oscillator to generate the necessary r-f signal while the other tube would amplify the a-f signal from a carbon microphone and produce enough power in its output to modulate the r-f signal. See Fig. 1 on the following page.

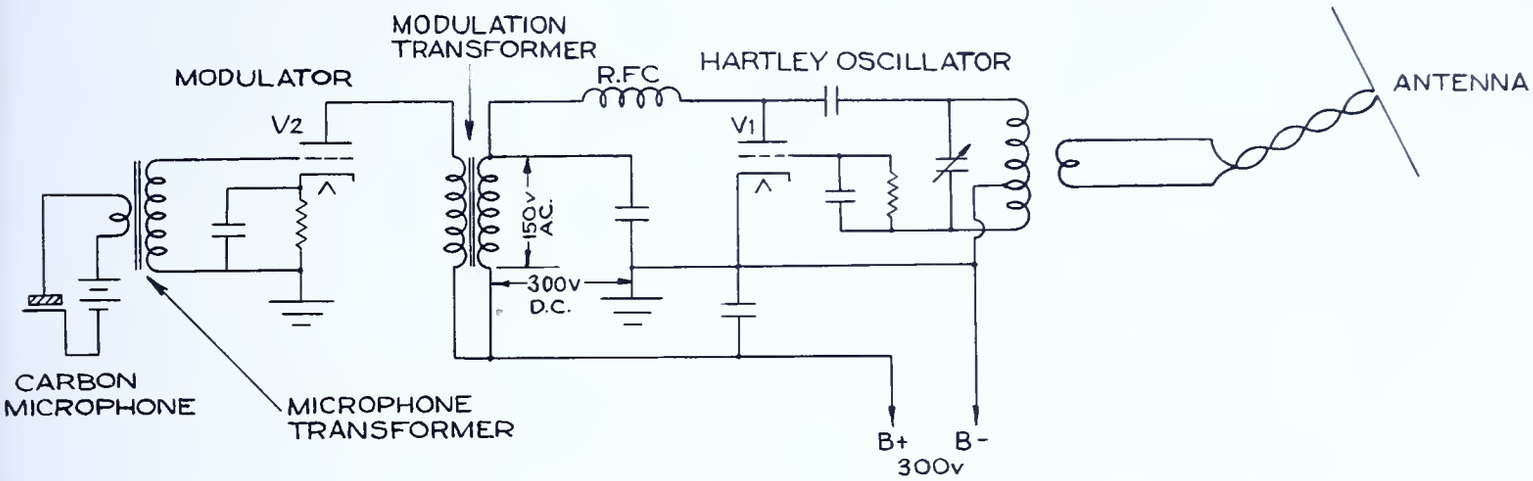

FIG.-1

The oscillator tube V_1 is connected in a Hartley circuit and generates the r-f signal. The wave form of this signal voltage is shown in Fig. 2.

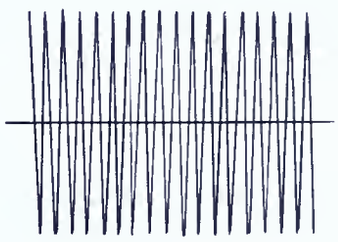

R-F SIGNAL
FIG.-2

The modulator tube V_2 is employed in an audio amplifier which "steps up" the a-f signal from the carbon microphone. The wave form of the output voltage of this tube is shown in Fig. 3.

The audio signal is coupled from the output of V_2 to the plate circuit of the oscillator V_1 by means of the modulation transformer. The audio signal voltage, therefore, is applied to the plate circuit of V_1 in such fashion that it adds to or subtracts from the B+ voltage for that tube. This is illustrated in Fig. 4. One curve illustrates the voltage applied to the oscillator when no modulation is present. The other curve illustrates how the plate voltage on the oscillator is varied when modulation is applied.

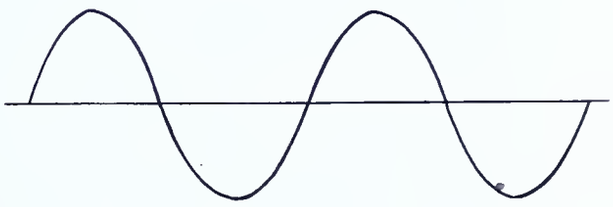

A-F SIGNAL
FIG.-3

The tube V_1 in Fig. 1 is said to be plate modulated because the a-f signal is introduced into its plate circuit.

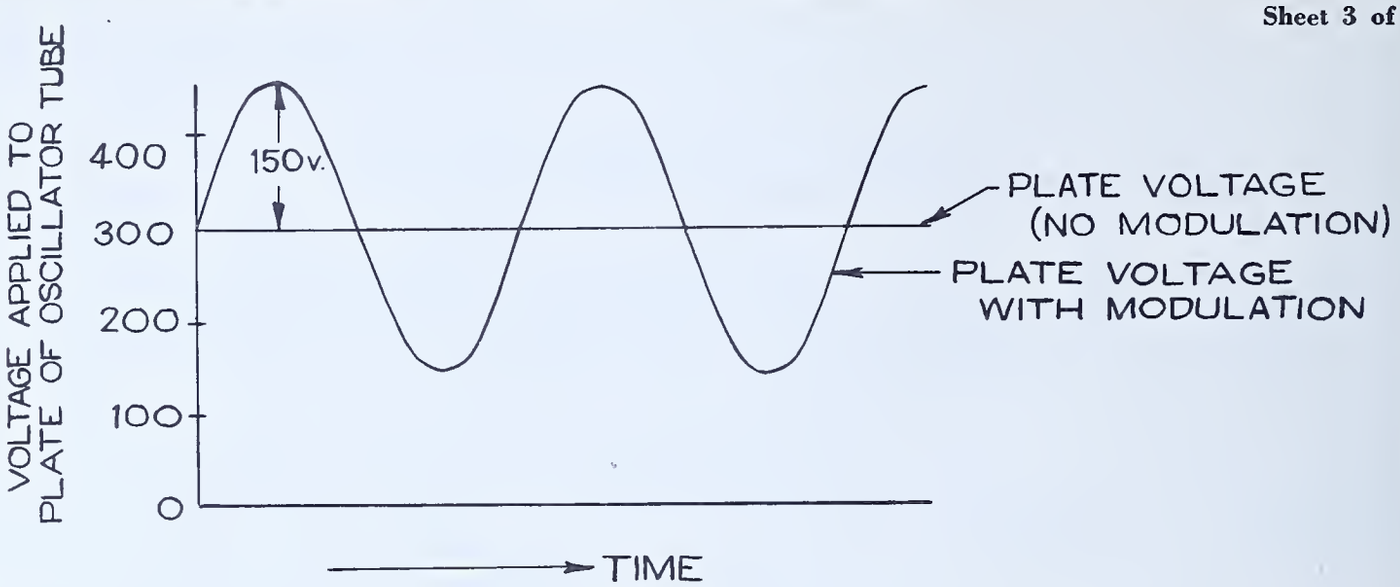

FIG.-4

As the plate voltage on V_1 varies, so does the amplitude of the generated r-f signal, a high plate voltage giving a high amplitude r-f signal (see Fig. 5) and a low voltage giving a low amplitude r-f signal (see Fig. 6).

Since the plate voltage on V_1 is varied in accordance with the a-f signal when V_1 is modulated by V_2, the amplitude of the generated r-f signal is varied as shown in Fig. 7.

FIG.-5

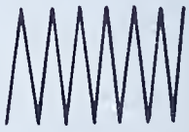

FIG.-6

In the usual transmitter, r-f amplifiers are used following the oscillator. Two reasons why modulation is accomplished in the r-f amplifier stages rather than in the oscillator are: (1) Modulation applied to the oscillator causes carrier frequency variations. This effect must be avoided since a high order of frequency stability is desirable. (2) The class C amplifiers which follow the oscillator are non-linear in operation, and therefore, they cannot faithfully amplify a modulated r-f voltage. This makes it preferable that the class C amplifier rather than the oscillator be the modulated stage.

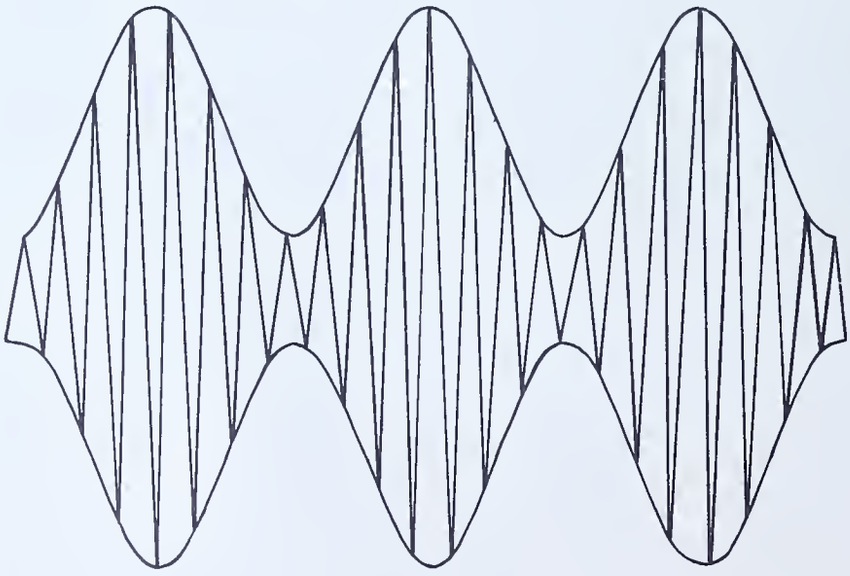

FIG.-7

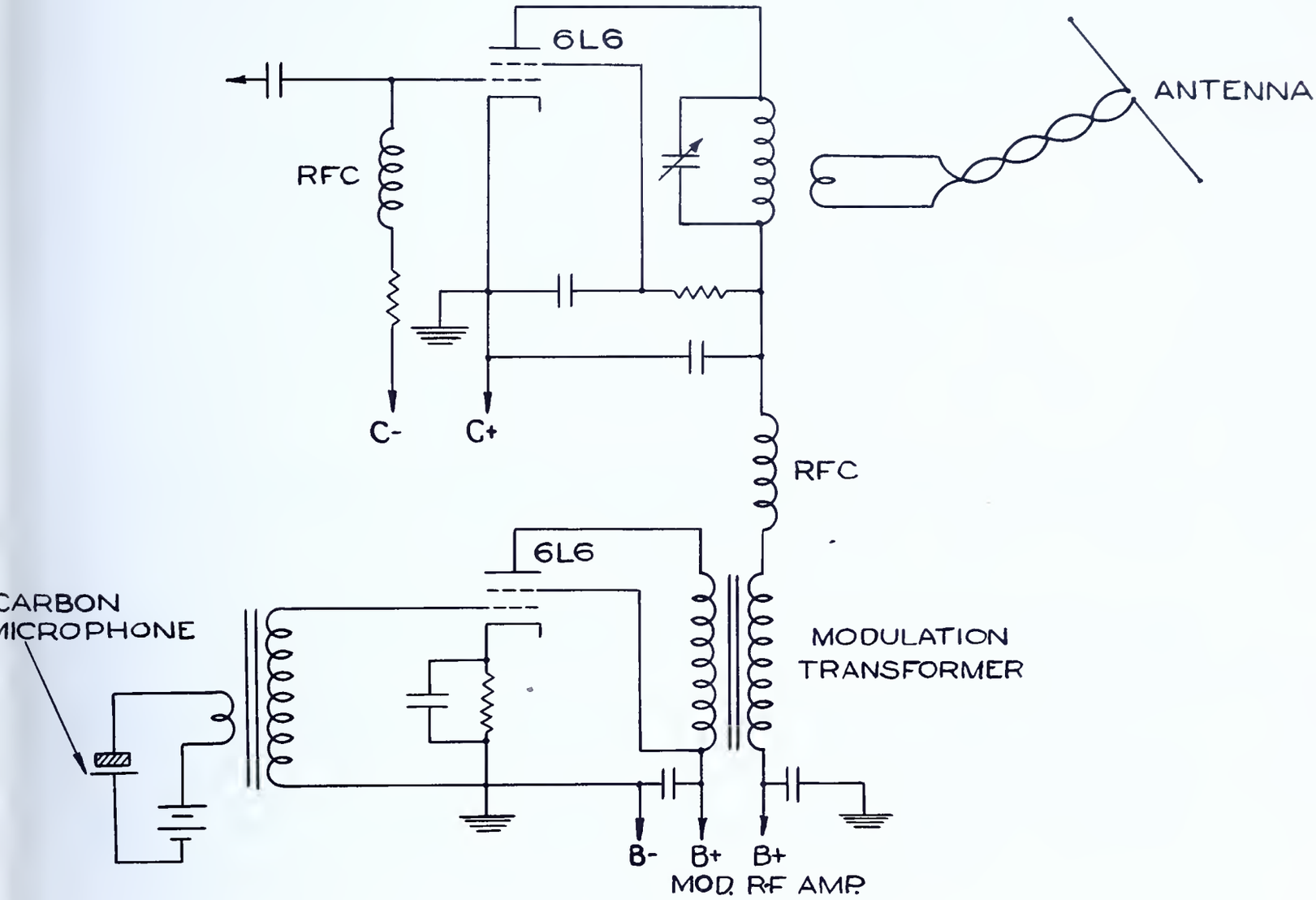

MODULATION OF
R-F POWER AMPLIFIER
FIG.-8

Fig. 8 illustrates an r-f power amplifier employing a power tube designed to operate under class C conditions. Another power tube is used as the modulator. The power output of the modulator is transferred by the modulation transformer to the plate circuit of the class C power amplifier. The audio voltage from the modulator adds to or subtracts from the r-f amplifier plate voltage. Since the amplitudes of the output of the class C amplifier varies with applied plate voltages, the r-f amplifier output contains amplitudes modulated by the output of the modulator stage.

If the power output of the modulator is small compared to the power input of the modulated r-f stage, the r-f signal cannot be completely modulated. This condition is called under-modulation, illustrated by Fig. 7.

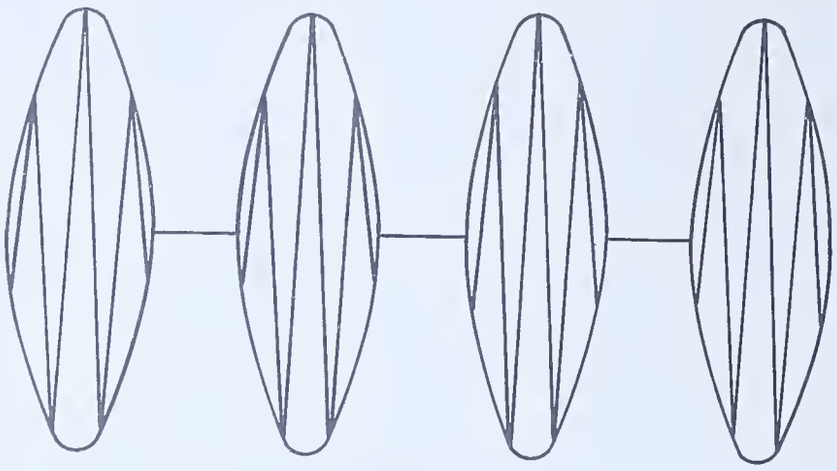

FIG.-9

If the power output of the a-f signal is very large, compared to the power input of the modulated r-f stage, a condition called over-modulation results. See Fig. 9.

The empty spaces between envelopes are caused by the large a-f voltage becoming negative to such an extent that the output of the r-f amplifier is completely cut off.

The proper amount of modulation is achieved when the a-f voltage causes the class C amplifier plate voltage to vary between zero and approximately twice normal plate voltage. To achieve this condition, the power output of the a-f modulator should be one-half the power input of the class C amplifier. This condition is called 100 per cent modulation. See Fig. 10.

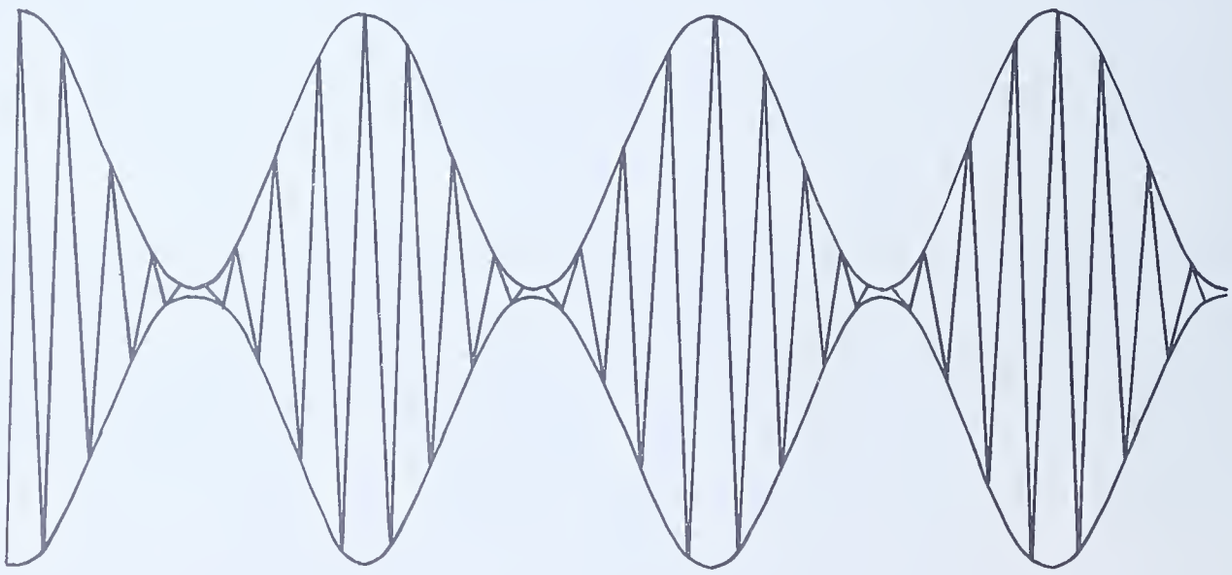

FIG.-10

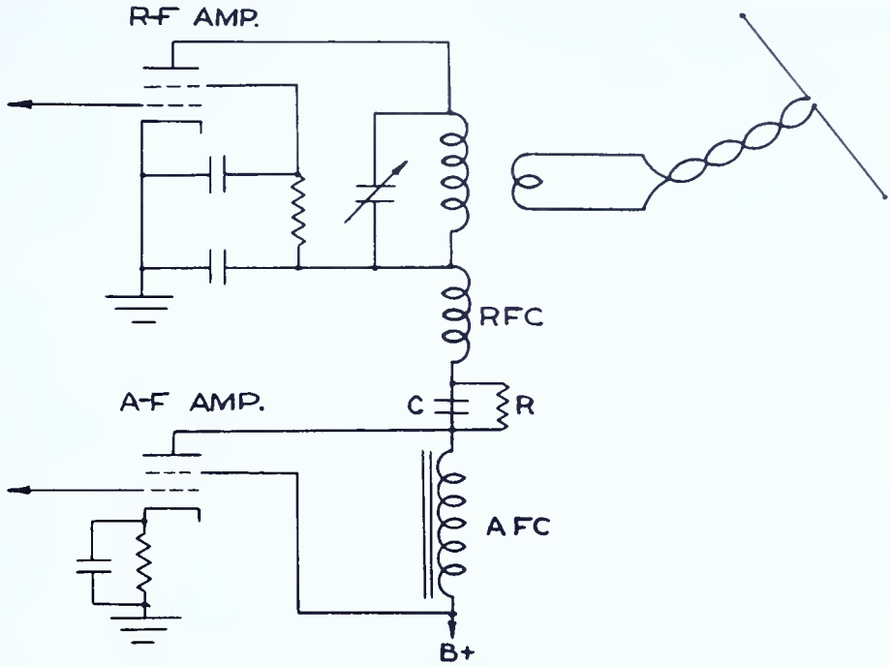

HEISING MODULATION
FIG.-11

Fig. 11 shows a choke used in place of the modulation transformer; this system is called Heising modulation. The resistor R and capacitor C are generally needed to obtain 100 per cent modulation in this case. The radio frequency choke coil (RFC) is used in any case to prevent radio frequency currents from entering the modulator unit.

Injecting the a-f signal into the plate circuit of the r-f amplifier is not the only way by which amplitude modulation may be obtained. Fig. 12 illustrates grid modulation in which the a-f signal varies the grid bias of the tube. This type of modulation requires less power from the modulator but gives a lower efficiency and greater distortion than plate modulation.

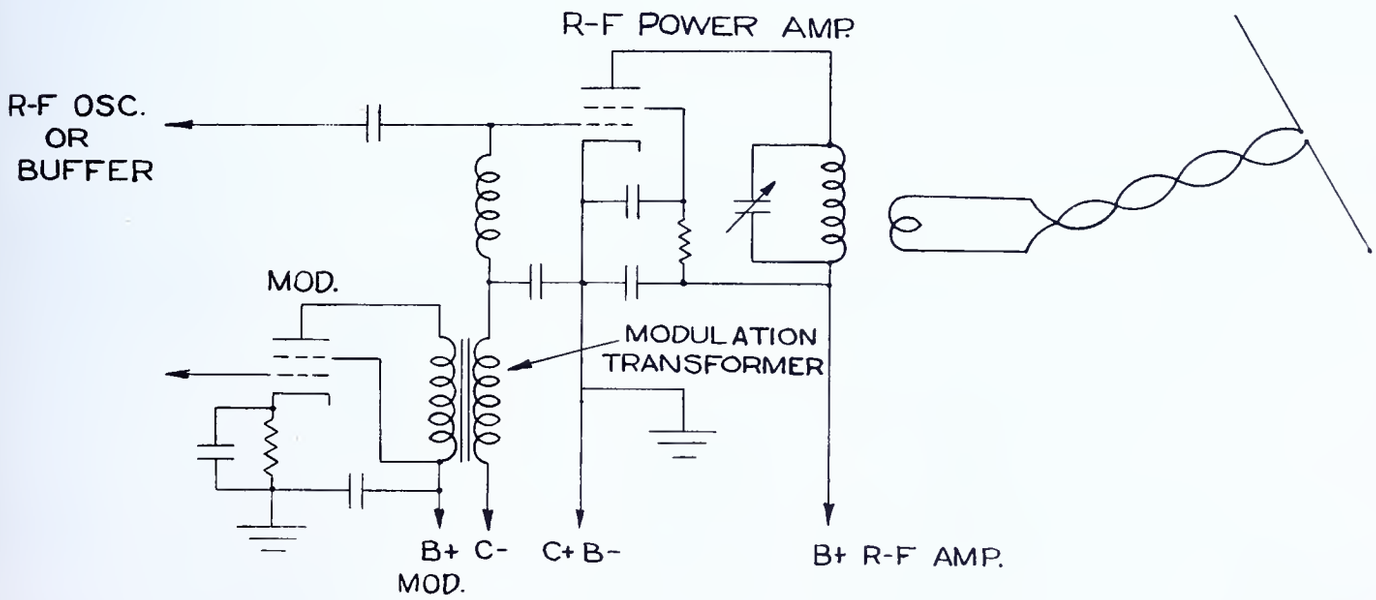

FIG.-12

Cathode modulation is a combination of plate and grid modulation. The efficiency of cathode modulation is somewhat greater than grid modulation and somewhat less than plate modulation. Fig. 13 illustrates cathode modulation. The a-f voltage is applied to the cathode circuit of the tube. Since the cathode is common to both the grid and plate of the tube, a combination of grid and plate modulation is obtained.

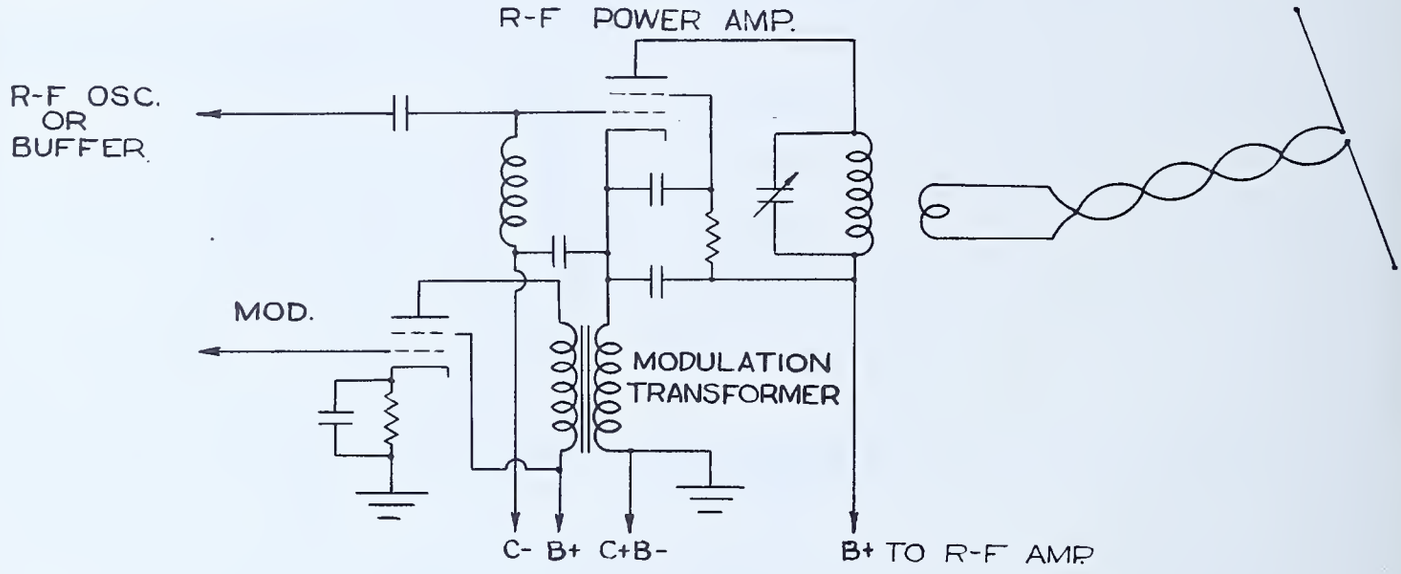

FIG.-13

Most modulators must supply a considerable amount of power to attain 100 per cent modulation. For this reason class B audio power amplifiers are very often used in transmitters since they give a higher efficiency in operation than class A power amplifiers.

Modulators which modulate the last r-f power amplifier in a transmitter are usually called high level modulators, since they modulate the r-f signal at the highest power level. Modulators which modulate some stage before the last r-f stages are usually referred to as low level modulators. In these the r-f stages following the modulated stage must operate under class B conditions to prevent excessive distortion. Fig. 14 illustrates the block diagram of a relatively large transmitter employing low level modulation.

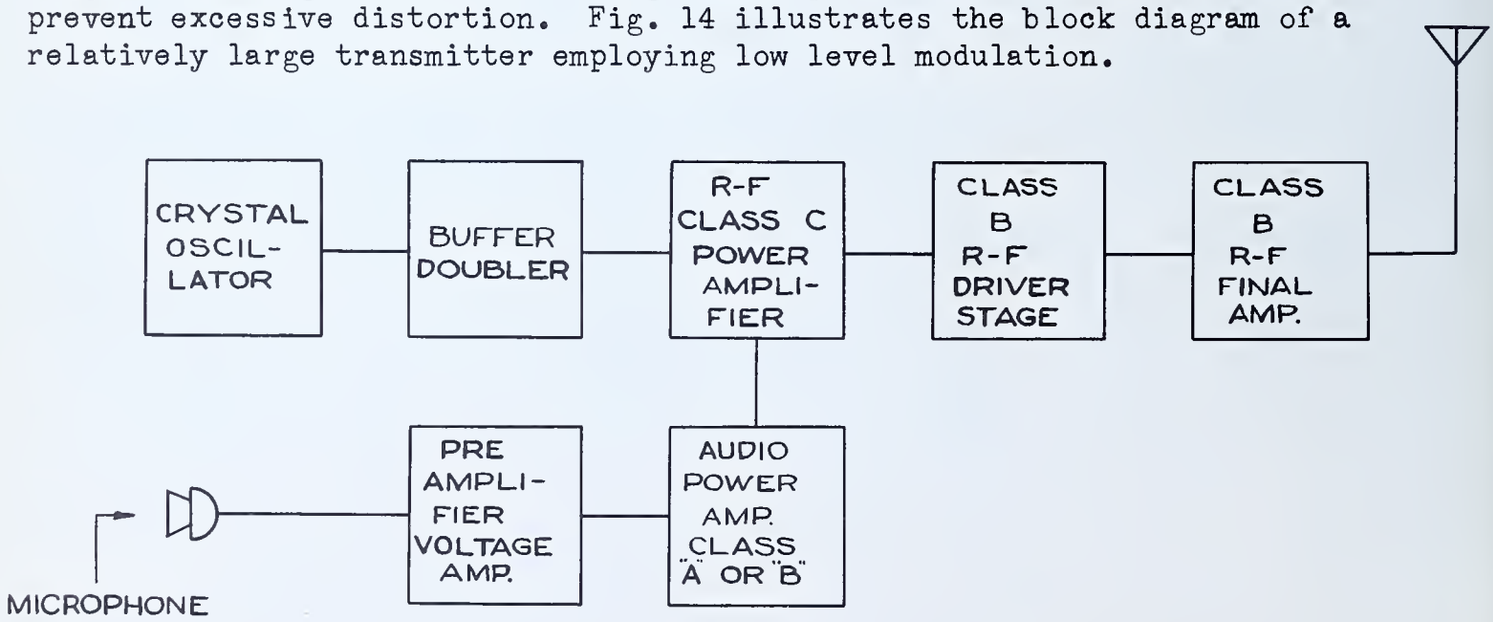

FIG.-14

HOW TO CONSTRUCT A TRIPLE SECTION POWER SUPPLY

General Information:

It is advisable that a separate power supply be used for each section of the transmitter in order to maintain good voltage regulation. In this job the three power supplies used for this transmitter are built on one chassis.

Specifications:

Construct a triple power supply according to the power supply schematic section of Fig. 19 and the chassis layout, Fig. 15.

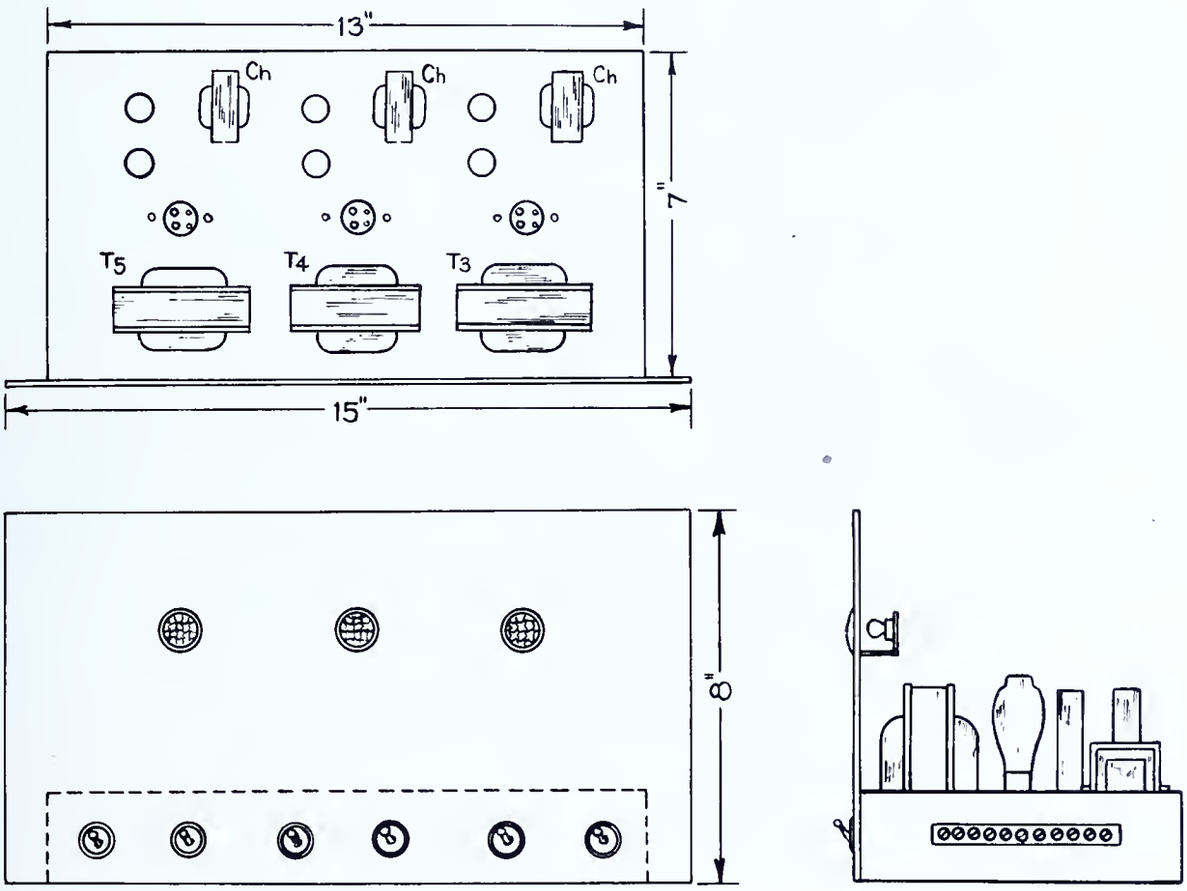

CHASSIS LAYOUT FOR TRIPLE SECTION POWER SUPPLY

FIG.-15

Tools needed:

1. Soldering iron
2. Screw driver
3. Long nose pliers
4. Diagonal cutting pliers
5. Hand drill
6. Drills as needed
7. Socket punches
8. Cold chisel
9. Hammer
10. Tools for laying out chassis

Equipment needed:

1. 2- #80 tubes
2. 1- #5Z3 tube
3. Multimeter

Materials needed:

1. 3 - Power transformers:
   Primary 105-125v, 60 cycles a-c
   Secondary 700v. C.T., 100 ma.
   " 5v, 3 amps.
   " 6.3v, 3.5 amps.

2. 6 - 8 mfd. 450 w.v. electrolytic capacitors
3. 3 - 30 hy. 100 ma. filter chokes
4. 3 - 25,000 ohm 50 watt resistors, tapped
5. 1 - 500 ohm 10 watt resistor
6. 3 - 4 prong sockets
7. 6 - Toggle switches
8. 2 - .01 mfd. 600v. tubular capacitors
9. 1 - 10 ft. double conductor line cord
10. 1 - plug for a-c outlet
11. 1 - 11 terminal screw type terminal strip
12. 3 - Jeweled pilot light assemblies
13. 3 - 6.3v pilot bulbs
14. 1 - 7" x 13" x 2" chassis
15. 1 - 8" x 15" x 1/8" "Presdwood" panel
16. Hardware as needed
17. Solder
18. Tie points as needed

Procedure:

1. Lay out and drill chassis as indicated in Fig. 15.

2. Test parts for operating condition.

3. Mount parts on chassis.

4. Prepare a wiring diagram indicating tie points. Plan wiring so leads can be cabled and laced for a neat appearance.

5. Have instructor check wiring diagram.

6. Wire unit according to wiring diagram and check against schematic.

7. Form and lace wiring into cables wherever possible.

8. Have instructor check work.

9. Plug in rectifier tubes to respective sockets.

10. Connect power supply to proper line voltage and turn on each section.

11. Check the voltage output of the unit at the terminal strip.

HOW TO CONSTRUCT AN ANTENNA COUPLER

General Information:

By means of the antenna coupler the output of the transmitter is matched to the impedance of the antenna system, permitting optimum power transfer to the antenna used. The coupler specified here is of the pi section type and will operate on frequencies between 2000 kc. and approximately 14,000 kc. The output of the transmitter is connected to the input of the coupler and the output of the coupler is connected to an incandescent lamp which serves as a dummy load.

By changing the connections of the antenna coupler several adaptations are possible as are shown in Fig. 16B, C, D, and E.

Specifications:

Construct a pi section antenna coupler according to Fig. 16A.

Tools needed:

1. Soldering iron
2. Screw driver
3. Long nose pliers
4. Diagonal cutting pliers
5. Hand drill
6. Drills as needed

Materials needed:

1. 1- Panel 8" x 15" x 1/8" "Presdwood"
2. 2- 365 mmf. variable capacitors C_1-C_2
3. 2- .002 mfd. mica capacitors C_3-C_4
4. 2- Coil forms, 1-3/4" dia., 2½" long
5. 4- Terminals, binding head preferred
6. 2- Dials 3" (insulated)
7. 4- 1½", 6-32 RH Brass screws and nuts
8. 4- 3/4", 6-32 RH Brass screws and nuts
9. 4- Fiber sleeves 6-32 hole, 1" long
10. 2- Pcs. scrap bakelite or fiber for mounting terminals
11. 2- Small alligator clips
12. 30 ft. #24 D.C.C. copper wire

Procedure:

1. Wind coils L_1 and L_2 according to data supplied on Fig. 16A.
2. Lay out and drill the panel to support parts as shown.
3. Mount all parts on the panel.
4. Wire parts according to the schematic diagram.
5. Have instructor check work.

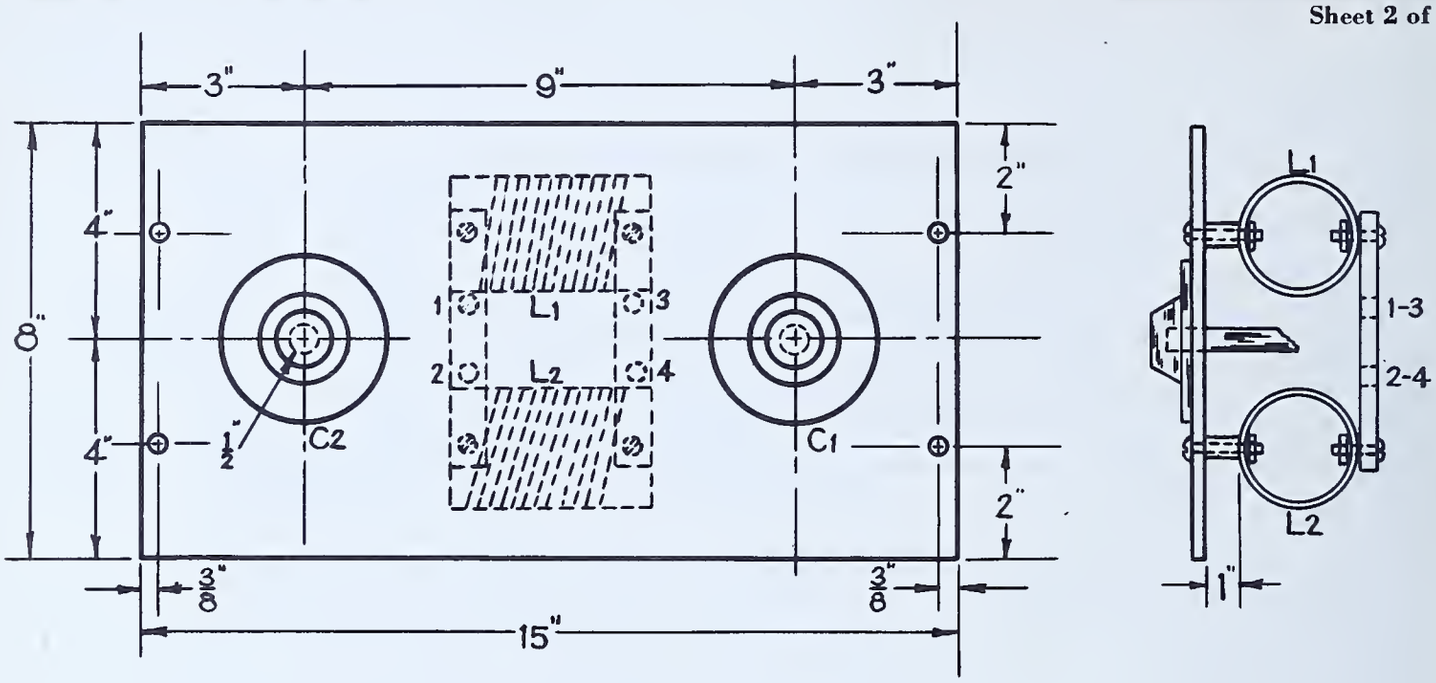

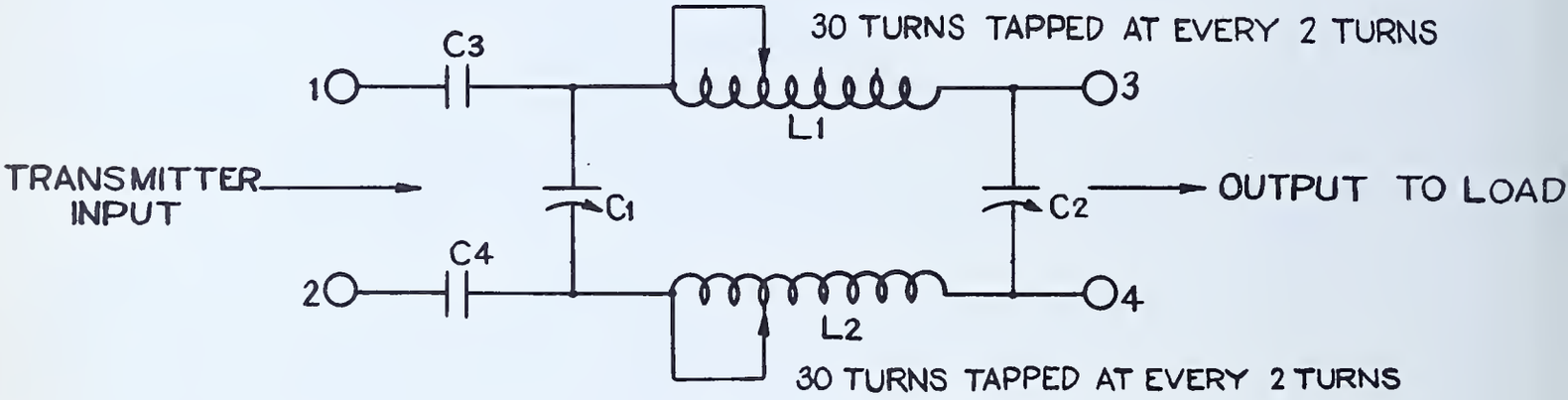

P1 SECTION COUPLER SPECIFICATIONS

FIG.-16 A

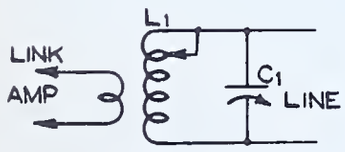

PARALLEL TUNING FOR 2 WIRE LINE

FIG.-16B

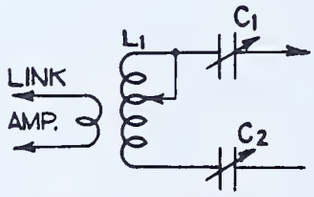

SERIES TUNING FOR 2 WIRE LINE

FIG.-16C

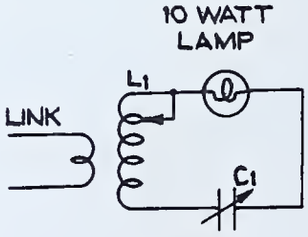

DUMMY ANTENNA

FIG.-16D

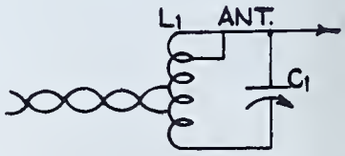

TWISTED PAIR OR CON
CABLE TO TUNED TANK
FEEDING END FED
ANTENNA

FIG.-16E

APPLICATIONS OF ANTENNA COUPLING UNIT

CONVERSION OF THE AUDIO AMPLIFIER

TO A MODULATOR UNIT

General Information:

To convert the audio amplifier constructed in Job 5 to a speech amplifier-modulator for the transmitter, it is necessary to install a modulation transformer in place of the output transformer. This must be done because the impedance of the class C final amplifier in the transmitter is much higher than the impedance of a loudspeaker. The modulation transformer makes possible the proper matching of impedance between the audio amplifier and class C final amplifier to which it is connected.

Specifications:

1. Install a modulation transformer in place of the output transformer on the audio amplifier constructed in Job 5. Follow the schematic, Fig. 18.

2. Install a panel on the completed unit.

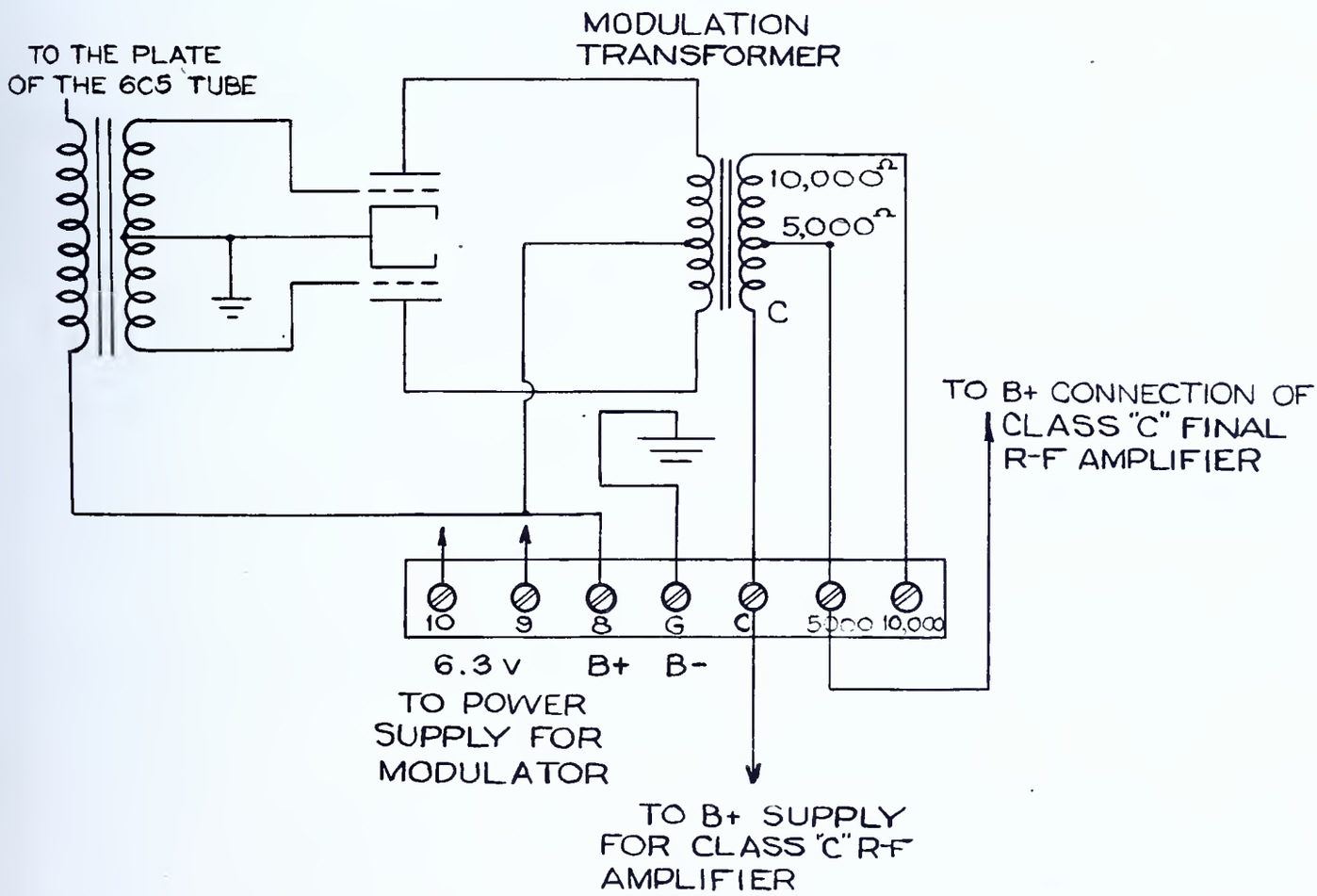

SCHEMATIC DIAGRAM SHOWING MODULATION TRANSFORMER CONNECTIONS
FIG.-17

Tools needed:

1. Soldering equipment
2. Screw driver
3. Long nose pliers
4. Diagonal cutting pliers
5. Hand drill
6. Drills

Materials needed:

1. 1- Modulation transformer to match a 6N7 to 5,000 or 10,000 ohm impedance.
2. 1- 8" x 15" panel
3. Hook-up wire
4. Machine screws and nuts for mounting transformer and panel

Equipment needed:

1. Audio amplifier constructed in Job 5

Procedure:

1. Remove the output transformer from the audio amplifier.

2. Lay out and drill the holes necessary for mounting the modulation transformer in the place of the output transformer.

3. Mount the output transformer on the audio amplifier.

4. Wire the modulation transformer according to Fig. 17.

5. Label the terminal strip of the audio amplifier as shown in Fig. 17.

6. Lay out and drill the panel for the amplifier.

   Note: This panel is mounted in similar fashion to those used in Jobs 2, 3 and 4.

7. Mount the panel on the audio amplifier.

8. Have the instructor check the unit. The audio amplifier may now be used as the modulator in the transmitter.

THE ASSEMBLY OF THE UNITS OF A TRANSMITTER

General Information:

This information is provided for assembly of the various units of the transmitter. The assistance of the instructor is essential for the assembly, initial testing, and operation of the transmitter.

Specifications:

1. Construct a rack for the mounting of the units of the transmitter.

2. Assemble the complete transmitter.

Tools needed:

1. Wood-working tools
2. Soldering equipment

Materials needed:

1. Metal braces
2. Modulation transformer
3. Wire or cable as required (color coded preferred)
4. Woodscrews, nuts and bolts.

Equipment needed:

1. Triple power supply (Ref. Q)
2. Audio amplifier as constructed in Job 5
3. Exciter-doubler as constructed in Jobs 3 and 4
4. Final class C amplifier as constructed in Job 4
5. Pi section antenna coupler (Ref. R)
6. 10 watt incandescent lamp with socket

Procedure:

1. Construct a rack to support the various units or the transmitter. A suggested type is shown in Fig. 18, any variation of shelves or racks may be utilized.

   Note: This rack should support the units firmly, and be secured to prevent overturning.

2. Mount the power supplies, modulator, exciter, class C amplifier, and antenna coupler in the rack as shown in Fig. 18.

3. Wire the various units together as shown in Fig. 19.

4. Have instructor check wiring.

5. Form and lace the connecting wiring to make cables.

6. Connect a 10 watt incandescent lamp to the output of the antenna coupler.

7. Insert tubes and coils into their respective sockets in the transmitter.

8. Have instructor operate and check transmitter adjustment. The transmitter should now be ready for the testing performed in Jobs 7, 8 and 9.

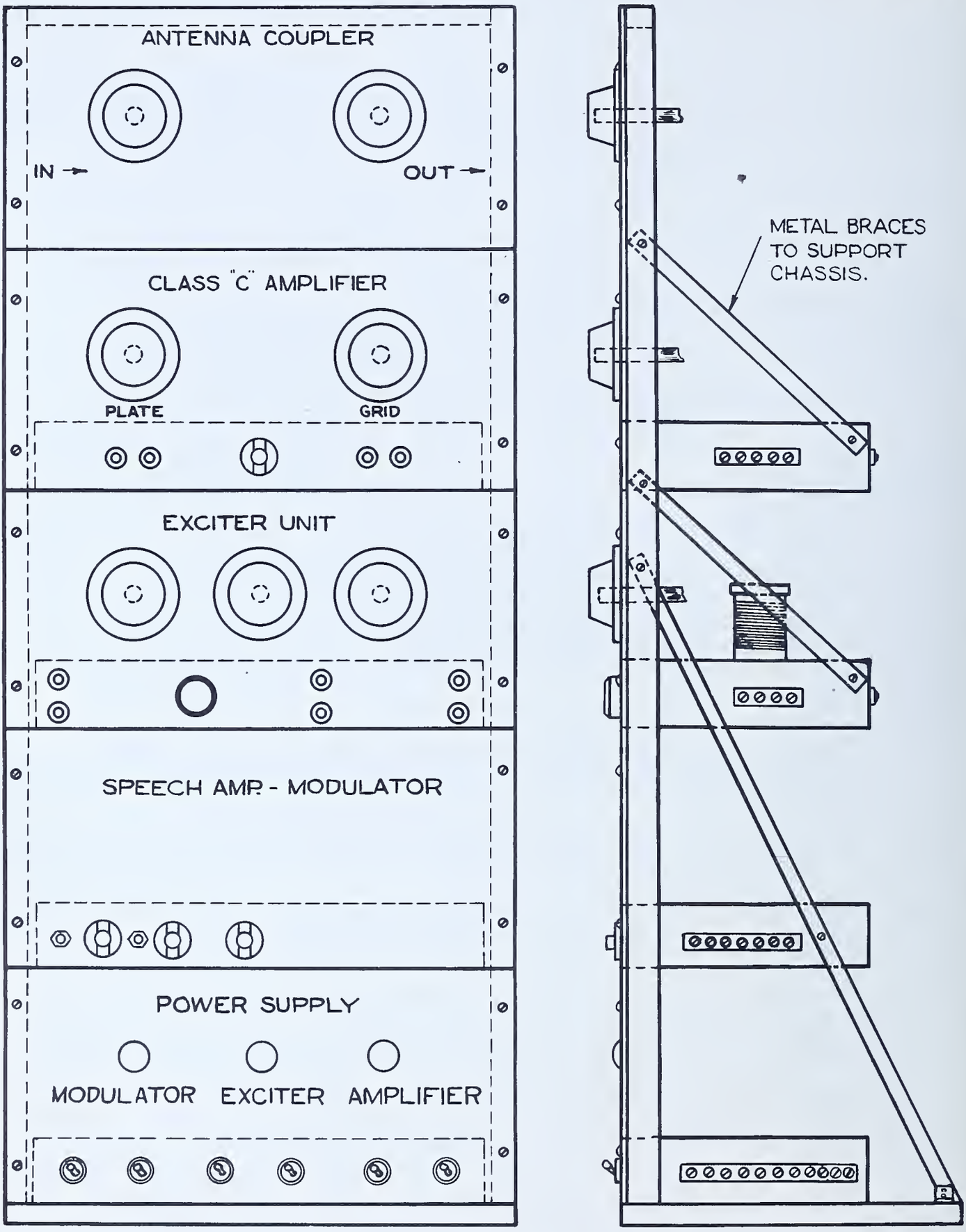

RELAY RACK ASSEMBLY OF TRANSMITTER UNITS
FIG.-18

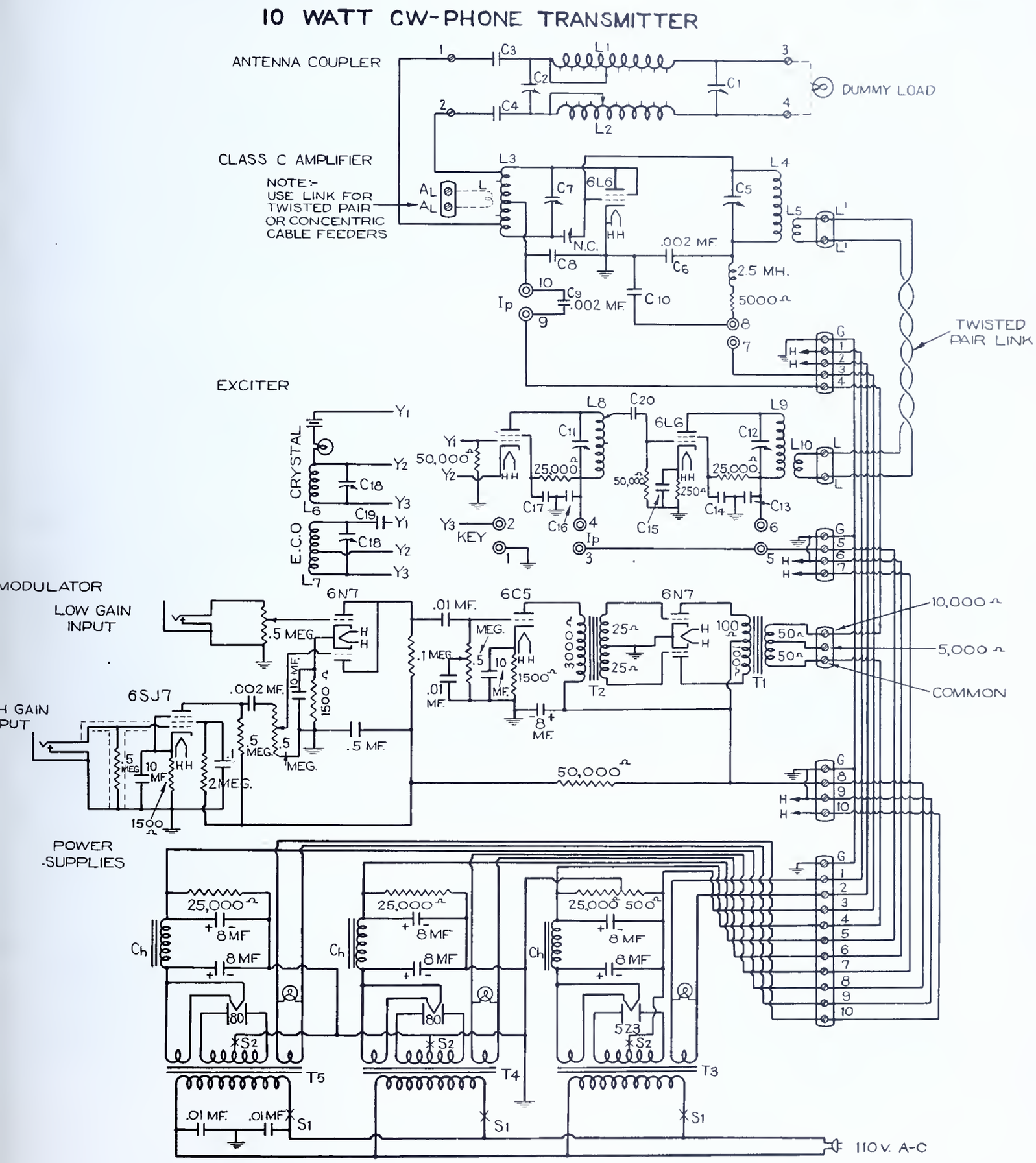
10 WATT CW-PHONE TRANSMITTER
ANTENNA COUPLER
DUMMY LOAD
CLASS C AMPLIFIER
NOTE:- USE LINK FOR TWISTED PAIR OR CONCENTRIC CABLE FEEDERS
TWISTED PAIR LINK
EXCITER
CRYSTAL
E.C.O
KEY
MODULATOR
LOW GAIN INPUT
H GAIN PUT
POWER SUPPLIES
COMMON
110 V. A-C

FIG. 19

CHECKING THE MODULATION OF A TRANSMITTER

General Information:

The cathode ray oscillograph is an instrument used to determine the voltage relationships existing within various circuits. The reaction of the voltages under consideration on a stream of electrons within the tube will cause the electron stream to trace a visible pattern on a fluorescent screen. The interpretation of these patterns in their various forms is of considerable importance in making transmitter measurements, especially those related to radio-telephone transmitters. Information regarding the manipulation of the controls should be studied in the instruction booklet accompanying the particular instrument used.

Modulation checking is one of the most useful applications of the oscillograph. It is necessary to make modulation checks to determine the per cent modulation of the transmitter output. The optimum is 100 per cent modulation of the r-f carrier. Over-modulation results in distortion and interference between adjacent carriers. Under-modulation results in reduced power output. Many widely varying factors enter into the realization of the correct modulation of the radio-telephone transmitter. The effect of these factors can be easily observed by application of the oscillograph. The oscillograph may be connected to the transmitter to provide either of the two patterns shown in Fig. 20.

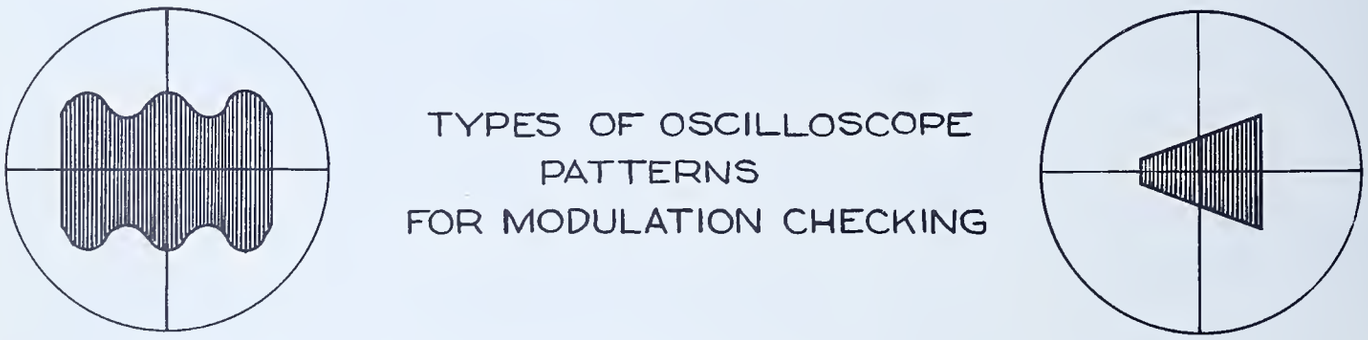

TYPES OF OSCILLOSCOPE PATTERNS FOR MODULATION CHECKING

A
WAVE ENVELOPE

B
TRAPEZOIDAL

FIG.-20

Fig. 20A shows a characteristic wave envelope pattern, and Fig. 20B shows one of the trapezoidal type. These basic patterns may be deformed from their regular shapes by erroneous transmitter adjustments. The transmitter must be adjusted to produce the correct pattern. For matter of simplicity, the trapezoidal pattern will be used in the following consideration of modulation checking.

To secure the trapezoidal pattern, the r-f output of the transmitter is coupled to the vertical deflecting plates by means of a twisted pair line terminated with a two or three turn pickup coil coupled to the r-f tank circuit. The horizontal deflection plates are connected through a voltage divider system to the output of the modulator system. This voltage divider should be variable so that adjustment can be made to obtain the correct horizontal deflection of the electron stream which will result from application of the audio modulating voltage. Figs. 21A and 21B show the correct methods of making connections for obtaining either the trapezoidal or wave envelope pattern.

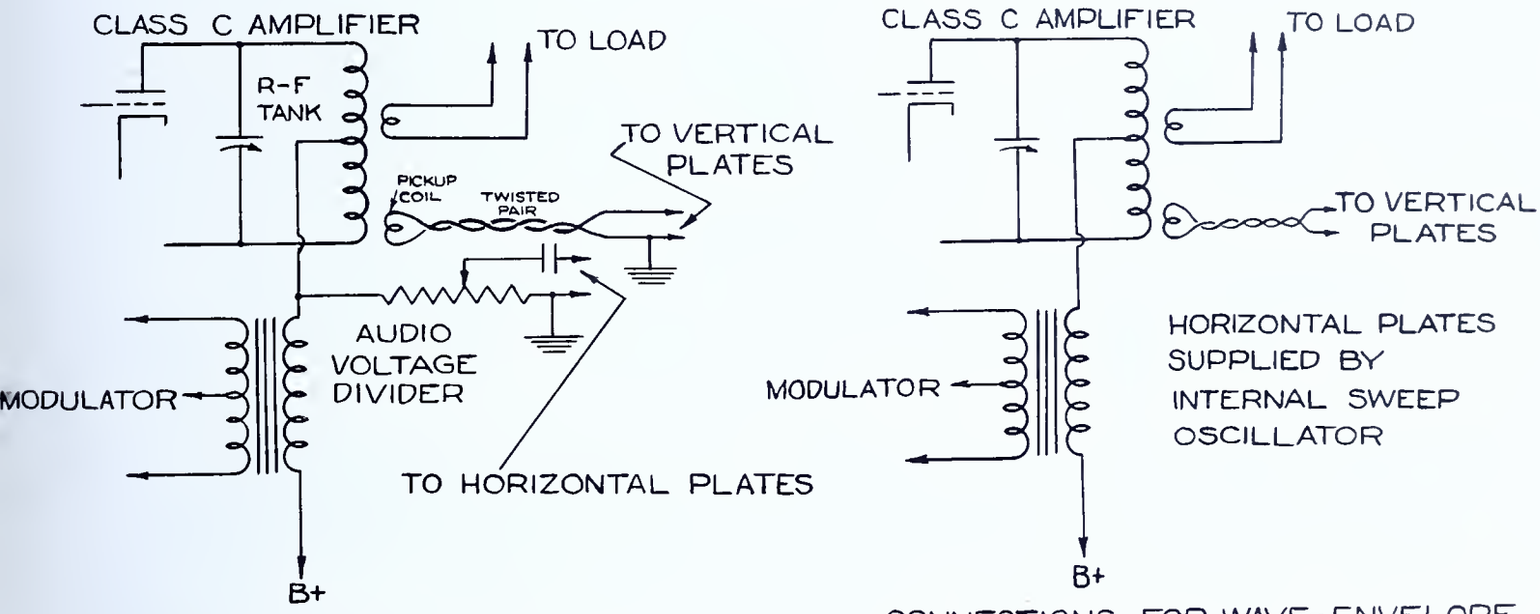

CONNECTIONS FOR TRAPEZOIDAL PATTERN
A

CONNECTIONS FOR WAVE-ENVELOPE PATTERN
B

FIG.-21

Upon application of an unmodulated r-f voltage to the vertical plates, a pattern will result as shown in Fig. 22. The length of the line A-B is a measure of the unmodulated r-f voltage.

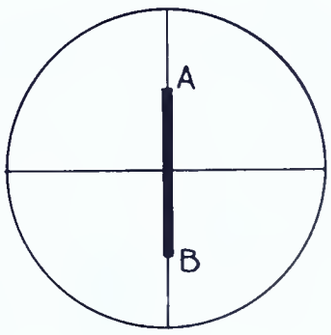

FIG.-22

If audio modulation is now applied to the r-f amplifier, this pattern will change to one of the following patterns for various percentages of modulation. See Figs. 23A, B, C.

The ideal condition of modulation results in a pattern which is a straight sided triangle as shown in Fig. 23B. This pattern is obtained when the d-c power input to the class C r-f stage is approximately twice the audio power supplied by the modulator. Too little audio power or too high an input to the class C stage will result in a figure such as Fig. 23A, while too much audio power or two little input to the class C stage will result in a figure such as Fig. 23C. Patterns resulting in shapes such as Fig. 23A or 23C may be corrected by transmitter adjustment.

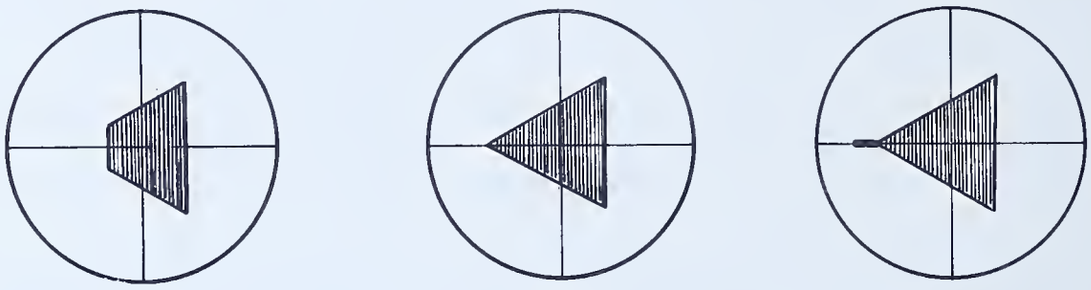

A — UNDISTORTED MODULATION LESS THAN 100%

B — UNDISTORTED 100% MODULATION

C — OVER-MODULATION TOO MUCH AUDIO INPUT

FIG.-23

Other factors may affect the proper modulation of the transmitter; these may be determined by interpretation of the oscillograph patterns. Some of the more important of these are shown in Fig. 24. Fig. 24A shows the pattern resulting from improper neutralization of a modulated class C amplifier; Fig. 24B shows the pattern which results from insufficient r-f grid excitation to the modulated class C amplifier, and Fig. 24C shows the presence of parasitic oscillation in the modulated class C stage at the positive peaks of the modulation wave form.

These and many other patterns (see Handbook reference) permit observations to be made which materially assist in checking the modulation of radiotelephone transmitters.

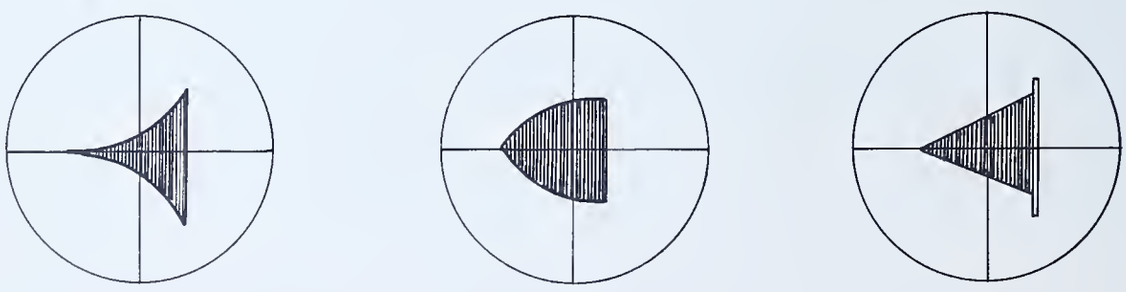

A — DISTORTION CAUSED BY IMPROPER NEUTRALIZATION

B — INSUFFICIENT GRID EXCITATION

C — PARASITIC OSCILLATIONS ON POSITIVE MODULATION PEAK

FIG.-24

CHECK THE TRANSMITTER FOR MODULATION, CARRIER HUM, AND DISTORTION

A. CHECK AND ADJUST TRANSMITTER FOR MODULATION

General Information:

In this job various adjustments are made within a transmitter to observe their effect upon the per cent modulation as indicated by the pattern on an oscillograph screen.

Specifications:

1. Check the transmitter for the following conditions of modulation using the trapezoidal pattern:

   a. Less than 100 per cent modulation
   b. 100 per cent modulation
   c. More than 100 per cent modulation

2. Determine the effect on the trapezoidal pattern of changing various factors within the transmitter which affect modulation.

Tools needed:

1. Soldering equipment
2. Long nose pliers
3. Diagonal cutting pliers
4. Screw drivers (large and small)

Equipment needed:

1. Cathode ray oscillograph
2. Radio-telephone transmitter (complete) with a modulated class C amplifier
3. Beat frequency oscillator
4. Voltmeter, 0-500v, d-c
5. Milliammeter, 0-100 ma., d-c
6. Dummy antenna
7. Test leads as necessary

Materials needed:

1. 10 ft. #18 or #20 insulated wire
2. Six-foot twisted pair cable
3. Friction tape
4. 0.1 mfd. 600 volt capacitor
5. 1-1000 ohm 10 watt resistor
6. 100,000 ohm 10 watt voltage divider (variable taps)

Procedure:

Caution: Always turn off apparatus before changing connections.

1. Study the instruction book of the oscillograph to be used; locate and become familiar with the controls and external connections of the unit.

2. Make a pickup coil about 3" in diameter, consisting of three turns of bell wire. This can be made on a form or simply wound on extended fingers and taped to hold its shape.

3. Tape the coil in several places to hold the wire in place.

4. Connect a six-foot twisted pair line to the ends of the coil. Tape the connections.

5. Couple the coil to the class C amplifier tank circuit. See Fig. 21A.

6. Connect the other ends of the twisted pair to the vertical amplifier input terminal on the CRO.

7. Connect the horizontal amplifier input of the CRO to the transmitter by means of the 100,000 ohm voltage divider and 0.1 mfd. capacitor as indicated in Fig. 21A.

8. Connect a dummy antenna to the transmitter.

9. Turn on the transmitter and adjust to produce rated r-f output to dummy antenna.

10. Set modulator gain control to zero.

11. Connect BFO output to low gain channel of modulator on transmitter.

12. Plug the BFO into a-c line and turn on.

13. Plug the oscillograph into a-c line and turn on.

14. Turn off vertical amplifier switch.

15. Turn off the horizontal amplifier switch.

16. Center the pattern on the screen.

    Caution: Keep intensity of the beam low.

17. Adjust the coupling of the pickup coil to obtain a pattern as shown in Fig. 22.

18. Set the BFO for 400 cycle signal and set the output attentuator for maximum output.

19. Advance modulator gain control to modulate the r-f carrier.

    Note: Adjustment of the 100,000 ohm voltage divider may be necessary to provide the correct horizontal deflection. See Fig. 20B

20. Vary the gain control of the speech amplifier and observe changes in the pattern as the percentage of modulation is varied from zero to approximately 125 per cent.

21. Sketch in notebook on copies of the circle form, Fig. 25, the wave form observed for each of the following conditions. Label each sketch.

    a. Less than 100 per cent modulation
    b. 100 per cent modulation
    c. More than 100 per cent modulation

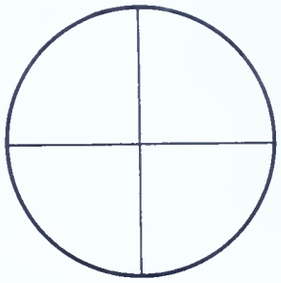

FIG.-25

22. Adjust gain control to secure 100 per cent modulation.

23. Connect a 1000 ohm resistor in series with the B+ voltage to the class C final amplifier stage. This is to reduce the power input to the class C amplifier.

24. Observe the change in pattern caused by this reduced power input.

25. Remove the 1000 ohm resistor and repair the B+ connections to normal.

26. Detune the frequency doubler plate tank circuit to reduce the excitation to the class C final amplifier stage to approximately one-fourth of normal.

27. Observe the change in pattern caused by the reduced excitation voltage.

28. Increase the excitation to normal.

29. Adjust the neutralizing capacitor to provide an unbalanced condition of neutralization.

30. Observe the change in the pattern caused by improper neutralization.

31. Adjust neutralizing capacitor for proper neutralization.

32. Vary frequency output of BFO from 400 cycles to 30 cycles. Observe effect on pattern in CRO screen.

33. Turn off apparatus.

34. Disconnect the audio voltage divider from the transmitter and remove leads from "horizontal" CRO terminals.

35. Disconnect BFO connections to modulator.

36. Leave remaining apparatus connected for Part B of this job.

37. Turn off modulator gain control.

B. CHECK TRANSMITTER FOR CARRIER HUM

General Information:

Carrier hum will cause the r-f voltage to have a wave envelope shape similar to Figs. 26B and 26C even though the modulator unit is not supplying modulation. This condition is generally a result of: (a) poor filtering of the power supply voltages, or (b) incorrect by-passing. Carrier hum modulation is possible in both radio-telegraph and radio-telephone transmitters, and the ability to locate the presence of such hum is important in the processes of transmitter adjustment and trouble shooting. Figs. 26A, B, and C show the resulting patterns which will appear on the oscillograph screen for different carrier hum conditions.

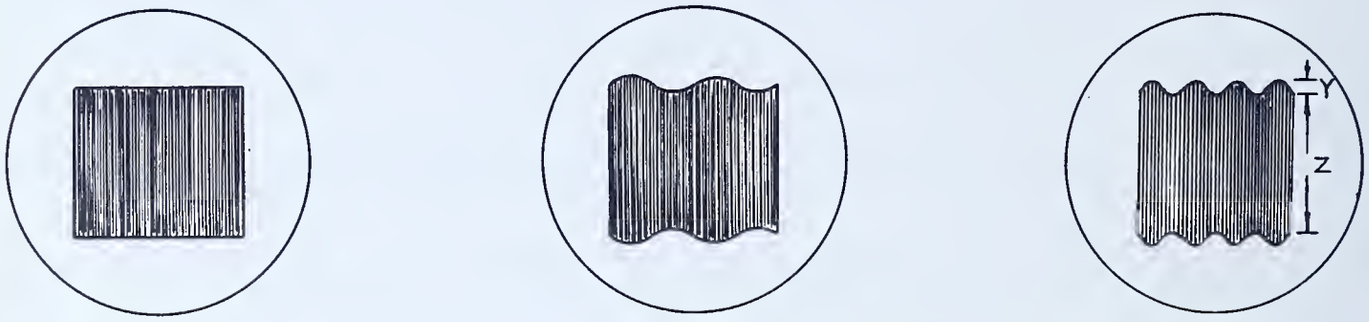

A
NO HUM MODULATION

B
LOW FREQUENCY HUM MODULATION

C
HIGHER FREQUENCY HUM MODULATION

FIG.-26

Two important factors concerning hum modulation may be found by interpretation of the patterns shown in Fig. 26A, B, and C:

(1) The percentage of hum modulation is one hundred times the ratio of the distance "y" to the distance "z" $\left(\frac{y}{z} \times 100\right)$ as measured on an oscillograph. See Fig. 26C.

(2) The frequency of the hum modulation may be determined by comparing the hum frequency to the sweep frequency as outlined in the oscillograph instruction book. Generally, the frequency of the hum modulation is that of the power line or a small whole number multiple thereof. To make these carrier hum determinations, connections shown in Fig. 21B should be used to provide an envelope pattern on the oscillograph screen.

Specifications:

Check the effect of hum voltage on the transmitter's carrier for the following conditions.

1. Improper filtering in class C power amplifier voltage supply.
2. Improper filtering in oscillator voltage supply.
3. Stray hum pickup in audio amplifier.

Tools needed:

1. Soldering equipment
2. Long nose pliers
3. Diagonal cutting pliers
4. Screw drivers (large and small)

Equipment needed:

1. Cathode ray oscillograph
2. Radio-telephone transmitter (complete) with a modulated class C amplifier
3. Voltmeter, 0-500v, d-c
4. Milliammeter, 0-100 ma., d-c
5. Dummy antenna
6. Test leads as necessary

Materials needed:

1. #18 or #20 insulated wire
2. Six-foot twisted pair cable

Procedure:

Caution: Turn off apparatus before changing connections and wiring.

1. Connect apparatus for wave envelope pattern as in Fig. 21B. (See Part A, Step 36.)

2. Set controls of CRO as follows:

   a. Vertical amplifier control "off".
   b. Horizontal sweep control to 60 cycles.

3. Turn on transmitter and adjust it for rated r-f output to dummy antenna.

   Note: Modulation gain controls must be turned off.

4. Attach CRO to proper a-c outlet and turn on.

5. Adjust focus and intensity controls for a trace of low but distinct intensity.

6. Adjust centering controls to center the trace on the screen.

7. Adjust the oscillograph coupling to transmitter to produce a vertical deflection of approximately half the height of the screen.

8. Advance horizontal amplifier gain control to spread the resulting carrier wave envelope pattern across half the width of the screen.

9. Observe the contour of the upper and lower edges of the pattern obtained and record sketch of the pattern.

10. Remove the filter capacitor connections of the class C amplifier power supply.

11. Observe the resulting carrier wave envelope of the class C amplifier with power supply filter capacitors disconnected and record a sketch of the pattern.

12. Replace class C amplifier power supply filter capacitor connections.

13. Remove filter capacitor connections of the oscillator power supply.

14. Observe resulting carrier wave envelope with the oscillator power supply filter capacitors removed and record a sketch of the pattern.

15. Replace oscillator filter connections.

16. Provide a means of stray hum pickup to the speech amplifier system by connecting the bare end of the five foot piece of insulated wire to the control grid of the 6SJ7 first speech amplifier tube in the modulator. Insert an open plug into the high gain input jack.

17. Advance modulator gain control to about half-way position. This will apply modulation.

18. Observe the resulting carrier wave envelope and record a sketch of pattern.

19. Remove wire connected to speech amplifier for introduction of stray hum pickup.

20. Leave apparatus connected for next part of job.

C. CHECK TRANSMITTER FOR DISTORTION

General Information:

In radio-telephone transmission it is important that the original wave form of the modulation be preserved in order that the signal be intelligible when received. The modulation present on the carrier may be distorted by faulty operation or improper adjustment of the transmitter. The interpretation of patterns obtained on the oscillograph screen as a result of distortion checks often provides clues which lead to the solution of transmitter trouble.

Distortion checks generally rely on comparison of the output wave form of the transmitter with that of the wave form of the source of modulation. For this reason the wave envelope pattern, Fig. 20A, and connections shown in Fig. 21B should be used for checking the wave form of the r-f carrier modulation.

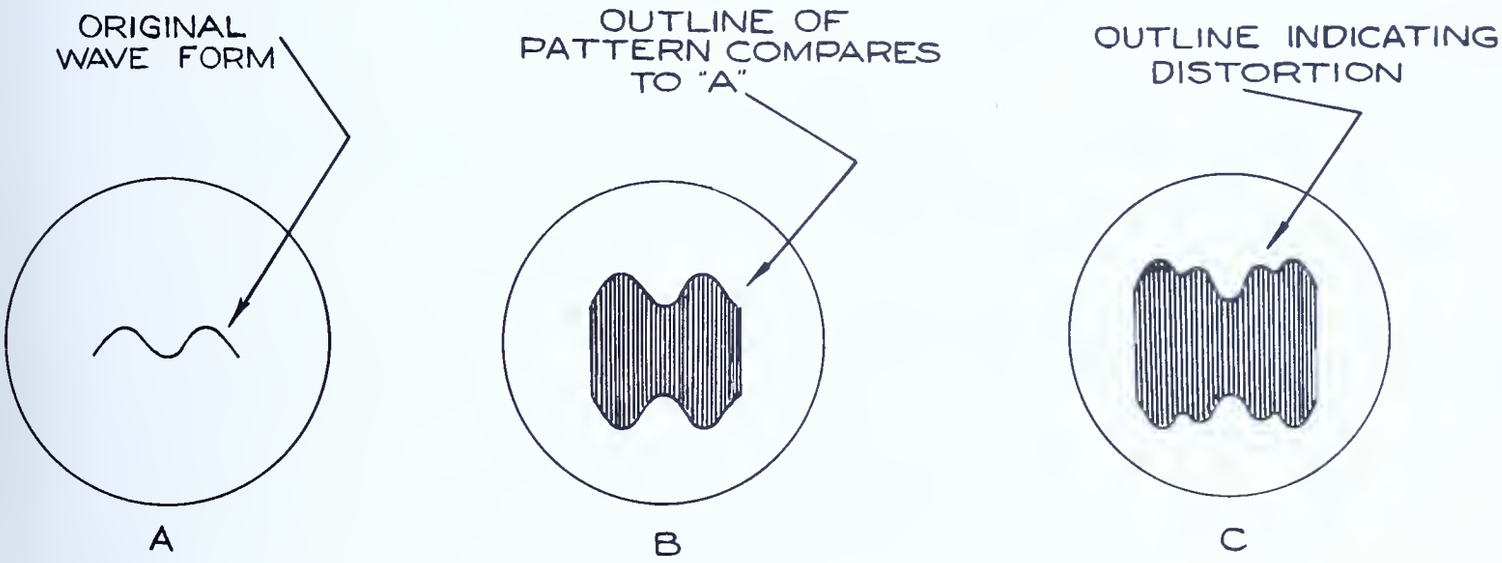

FIG.-27

As a basis for comparison, a sine wave source of audio frequency voltage (beat frequency oscillator) is used as the source of modulating voltage. The wave form pattern of this voltage is observed by means of the cathode ray oscillograph, Fig. 27A. The voltage is fed through the speech amplifier and modulator unit to modulate the r-f carrier; then by comparison of the wave form of the modulated carrier with that of the source, the presence of distortion will be indicated by deformations in the resulting modulated wave form. Fig. 27B shows the resulting pattern obtained in observing wave form of the modulated carrier. (Note the similarity of the two wave forms indicating the absence of distortion.) Fig. 27C shows the results of distortion being introduced between the input of the modulating system and the output of the modulated r-f amplifier.

Specifications:

Check the effect of distortion introduced in the transmitter carrier due to:

1. Overloading (non-linear distortion) in the modulator unit.
2. Improper impedance match between modulator and class C r-f amplifier.

Tools needed:

1. Soldering equipment
2. Long nose pliers
3. Diagonal cutting pliers
4. Screw drivers (large and small)

Materials needed:

1. #18 or #20 insulated wire
2. Six-foot twisted pair cable

Equipment needed:

1. Cathode ray oscillograph
2. Radio-telephone transmitter (complete) with a modulated class C amplifier
3. Beat frequency oscillator
4. Voltmeter, 0-500v, d-c
5. Milliammeter, 0-100 ma., d-c
6. Dummy antenna
7. Test leads as necessary

Procedure:

1. Connect the "vertical" terminal of the oscillograph to the output of the BFO.

2. Observe and record a sketch of the wave form of the audio frequency voltage generated by BFO. This is used as a reference pattern.

3. Remove oscillograph connections to the BFO.

4. Connect the output of the BFO to the low gain channel input of the speech amplifier modulator unit.

5. Couple the oscillograph to the r-f output of the transmitter to provide a wave envelope pattern. See Fig. 21B.

6. Turn on the transmitter and observe changes in the r-f carrier wave form as the audio gain control is increased to a point where distortion occurs.

7. Record a sketch of the resulting wave envelope pattern; this will indicate the distortion due to excessive audio gain.

8. Change modulation transformer secondary connection to provide a large mis-match of impedance between the modulator to class C amplifier.

9. Observe and record sketch of the resulting r-f carrier envelope pattern when modulation is applied.

10. Disconnect apparatus and return equipment to stock room.

QUESTIONS

Place the answers to these questions in your notebook or on form as directed by instructor.

1. What is the difference between amplitude and frequency modulation?
2. What does the term "keying" mean?
3. What is the advantage of using code over amplitude modulated voice transmission?
4. How is amplitude modulation accomplished in a transmitter?
5. What is the advantage of modulating the class C amplifier stage instead of the oscillator?
6. Name three methods by which amplitude modulation can be accomplished.
7. What causes under-modulation? Over-modulation? What are the disadvantages of each?
8. What distinguishes Heising modulation from other types?
9. What is the difference between low level and high level modulation?
10. What is the purpose of the pi section antenna coupler?
11. Why are three power supplies used for the transmitter?
12. Why was the output transformer of the audio amplifier replaced by a modulation transformer?
13. What types of oscillograph patterns may be utilized in transmitter measurements?
14. What are the essential differences in the connections between the oscillograph and transmitter for the two types of patterns suggested in this job?
15. What would be the frequency of the hum on the carrier if the resulting wave form showed frequency ratio of 2 to 1 with a horizontal sweep frequency of 60 cycles? If the ratio were 1 to 1?
16. What are the general causes of hum modulation on the carrier?
17. Show by means of illustrations how the oscillograph is useful as an indicator of distortion.
18. How may one determine: (a) the relative amount of modulation present on the carrier, and (b) the frequency of the hum voltage?
19. What are the causes of under-modulation? Over-modulation?
20. What conditions are necessary to obtain 100 per cent modulation of a class C amplifier?
21. Show trapezoidal patterns indicating under-modulation, 100 per cent modulation, over-modulation.
22. Failure of what parts would be likely to cause carrier hum modulation?
23. How could the oscillograph be adapted as an indicator of the r-f output voltage of any particular stage of the transmitter?
24. Why must the vertical amplifier be in the "off" position when making r-f measurements?

References:

Everitt, W. F., et al., Fundamentals of Radio,
pp. 140-144, 175-176, 206-212, 285-299.
Henney, K., Principles of Radio (Fourth Edition),
pp. 239-258, 365-368, 489-498.
The Radio Amateur's Handbook (Any Edition), A. R. R. L.,
Chapters on Modulation, Adjustment of Phone Transmitters,
Measurements and Measuring Equipment.
The Radio Handbook (Any Edition), Editors and Engineers,
Chapters on Radio-Telephony Theory, Speech and
Modulation Equipment, Test and Measuring Equipment.

UNIT 8

THE ADJUSTMENT AND USE OF TRANSMITTERS AND ASSOCIATED EQUIPMENT

Reference V — Theory of Transmitter Operation. Page 150

Reference W — Theory of Adjustment of Equipment Associated with a Transmitter. Page 153

JOB SHEET 8 — ADJUST A TRANSMITTER AND ASSOCIATED EQUIPMENT. Page 164

THEORY OF TRANSMITTER OPERATION

General Information:

The complete transmitter unit consists of a combination of several of the basic units previously considered. See Fig. 1. The transmitter usually has an r-f oscillator for frequency control, which may be either the self-excited or crystal controlled type, and one or more r-f amplifiers which may or may not perform the function of frequency multiplication. These units comprise the r-f energy generating section and must be properly coupled to an antenna system for efficient radiation of the r-f energy into space.

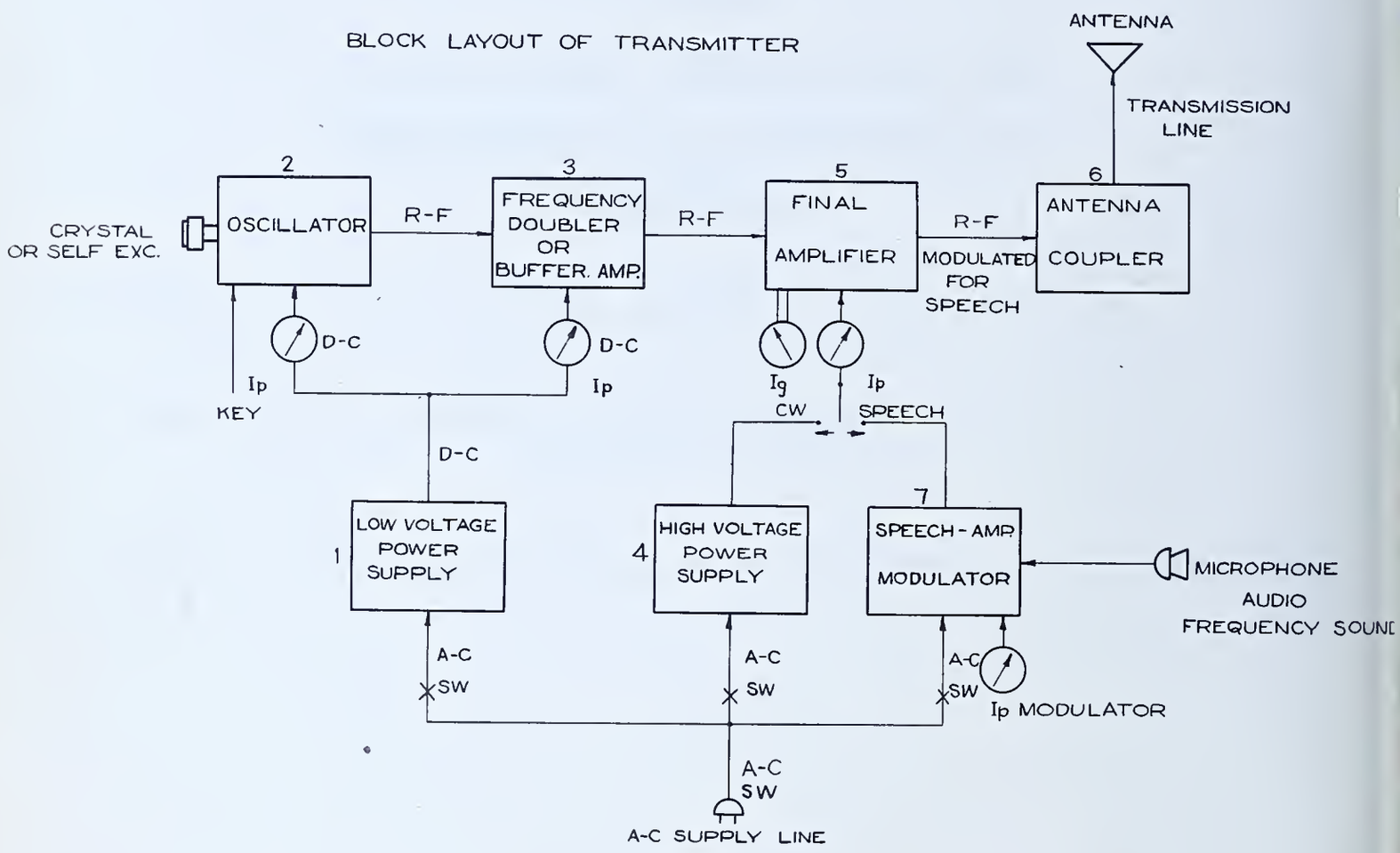

FIG. 1

The function of coupling is performed by means of an antenna coupling unit. In many cases this unit consists of a pi section coupler; but where the antenna is removed a considerable distance from the transmitter, a transmission line is used to transfer the energy from the coupler to the antenna proper.

In the adjustment of transmitters prior to actual transmission, it is required by federal regulations that the energy radiated into space shall be kept at a minimum in order to prevent interference with other duly authorized services. For this reason a dummy antenna, which will consume the energy output of the transmitter within itself, is used in place of the usual antenna system. Generally, this antenna is a non-reactive resistance element of such value as to exhibit characteristics similar to those of the actual antenna. See Reference G, "The Dummy Antenna".

The r-f energy generated by the transmitter must be on the exact frequency assigned by the Federal Communications Commission. Frequency adjustment is one of the most important of all transmitter adjustments and necessitates the use of a reliable standard of frequency as a measuring device. The instruments most widely used for this are of the heterodyne type. However, with the heterodyne type frequency meter determination of the order of harmonic is not reliable; so for absolute surety, the absorption type frequency meter, which does not respond readily to harmonics of the fundamental frequency, must be employed. In checking frequency one should first determine the fundamental frequency and the proper order of harmonic with the absorption frequency meter, and then use the heterodyne frequency meter to make a highly accurate determination of operating frequency and frequency stability, as well as checking (known as "monitoring") the quality of the generated r-f signal.

In cases where the frequency of operation is very high and beyond the range of the ordinary heterodyne and absorption type frequency meters (approximately 112,000 kc.), the Lecher wire system is used for frequency measurement. By this method actual physical measurement of the length of the r-f wave is made and converted mathematically to frequency in kilocycles per second.

The energy supplied to the antenna is radiated and produces an electro-magnetic field in the surrounding space. The strength of this field is a measure of the ability of the transmitter to act successfully as a means of communication. For this reason measurements utilizing a field strength meter are necessary to insure the proper functioning of the transmitter. This instrument is essentially a vacuum tube voltmeter device and is calibrated to measure the relative strength of the radiated field surrounding the antenna at some pre-determined distance. The field strength meter is also useful in determining the relative amount of energy being delivered by any of the several r-f stages of the transmitter. This function is often helpful in making such adjustments as are necessary to provide most efficient operation.

The several stages comprising the transmitter must be supplied with the proper a-c and d-c operating voltages as required. These values are usually measured by means of instruments connected into the proper circuits. Adjustment of these voltages to required values is one of the first steps taken in placing a transmitter in operation; the voltage values must be adhered to within their allowable tolerances.

In the case of transmitters designed for telegraph operation, a means of breaking the generated r-f voltage into groups of short and long pulses, representing dots and dashes, must be provided. This process is called keying. The wave trains of r-f energy must be started and stopped instantaneously to produce keying characteristics which are clean cut. Adjustment of the transmitter tuning and good regulation of the power supply are very important in securing this result.

When the transmitter is used for radio-telephone transmission, preliminary adjustments are of prime importance. The intelligibility of the transmitted speech will depend largely upon making the following adjustments correctly: (1) the amplifier plate circuit loading ($E_p \times I_p$), (2) modulation transformer matching, and (3) r-f excitation to the modulated r-f stage. Methods of analyzing the adjustments just made include the use of modulation indicators, monitors, and the cathode ray oscillograph. A modulation indicator compares the relative strength of the r-f carrier wave and its a-f component. Overall fidelity of the audio system must also be considered. Therefore, the final check is to monitor (listen to) the transmitted energy. A monitor is a local receiver designed especially to check audibly the output of a transmitter.

In any analysis a step by step procedure is necessary, starting first with the source of energizing power, and then testing stage by stage through the r-f system and then through the modulating stages. Strict adherence to recommended values specified by the designer is necessary for satisfactory results.

THEORY OF ADJUSTMENT OF EQUIPMENT ASSOCIATED WITH A TRANSMITTER

General Information:

The following data must be understood in order to perform the step by step adjustments which are given in the job procedures at the close of this unit.

A. The Pi (Π) Section Matching Unit

This unit is used for matching the output impedance of an r-f amplifier to the antenna system. Its name is derived from the characteristic circuit diagram which takes the form of the Greek letter "pi" (Π). There are two forms of this unit, one for the balanced amplifier (Fig. 2A) and one for the unbalanced type amplifier (Fig. 2B). In either type the use and adjustment is the same. Before any adjustments are made, the output of the coupler is connected to a dummy load which may be an incandescent lamp of suitable wattage rating, or a resistance and an r-f ammeter.

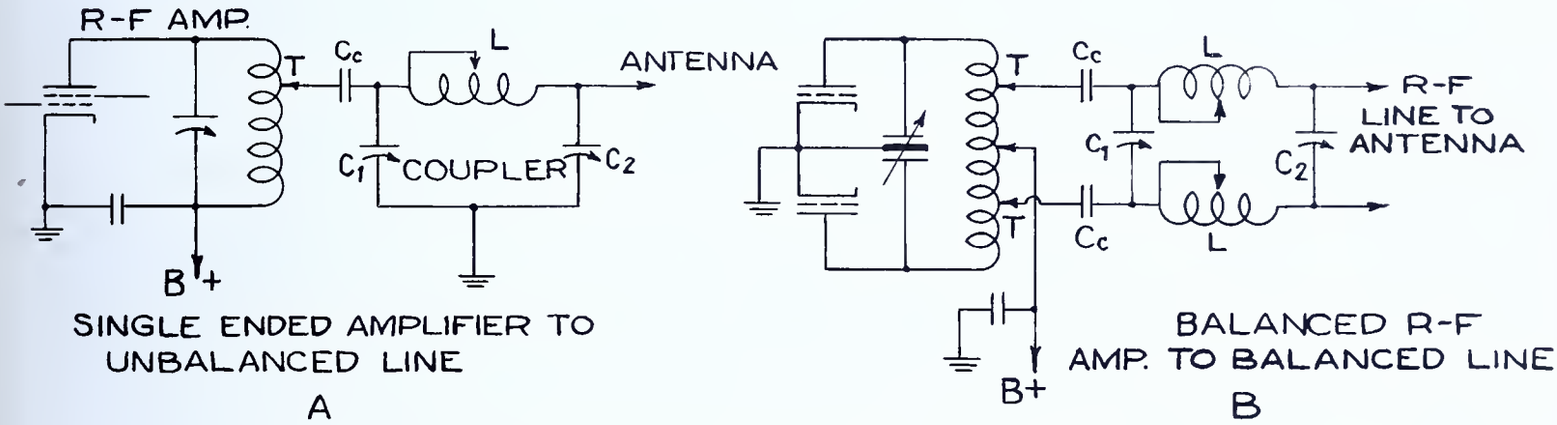

Pi (π) SECTION ANTENNA COUPLERS
FIG.-2

In adjusting the pi section coupler (Fig. 2A), the r-f amplifier or oscillator is disconnected from the coupler by removing tap T. The r-f stage is then tuned to exact resonance, using low plate voltage for safety. Once this adjustment has been made, it should not be touched again throughout the procedure.

The unit is then coupled to the r-f stage by placing the tap T about midway between the B+ and plate connection of the tank coil. Capacitor C_2 is then set to about half capacity, and C_1 is set to the point where the plate current taken by the r-f amplifier dips to its lowest value. This minimum value of plate current is higher than previously indicated with the coupler disconnected due to the energy transferred by the coupler to the load. The value of the plate current can be increased by reducing the capacity of C_2 and re-setting C_1 to resonance. If the value of plate current is too high, increase the value of C_2 and readjust C_1.

Should the plate current still be too high, even with C_2 at maximum capacity, corrections can be made by substituting a larger value of capacitor for C_2 or moving the tap T nearer the B+ end of the plate tank coil.

The tapped inductance L is made adjustable to permit satisfactory operation over a wide range of frequencies and should be adjusted until a suitable condition of amplifier loading is possible. The pi section unit is essentially an impedance matching device; for any value of inductance L, the transformation ratio depends upon the ratio of the capacitances of C_1 and C_2. Adjustments for the coupler in Fig. 2B are similar to those for that of Fig. 2A; however, in 2B the unit is coupled to the tank circuit by means of two taps; these must be moved in unison when making adjustments.

B. The Use and Adjustment of Lecher Wire Lines

In cases where the frequency of the generated r-f voltage is very high (above 112,000 kc.), it becomes necessary to use the Lecher wire method of making the frequency measurements. This measures the actual physical wavelength of the r-f voltage.

A Lecher wire line (see Fig.3) consists of two parallel wires (A and B) separated by insulators and coupled to the source of r-f voltage by a coupling coil.

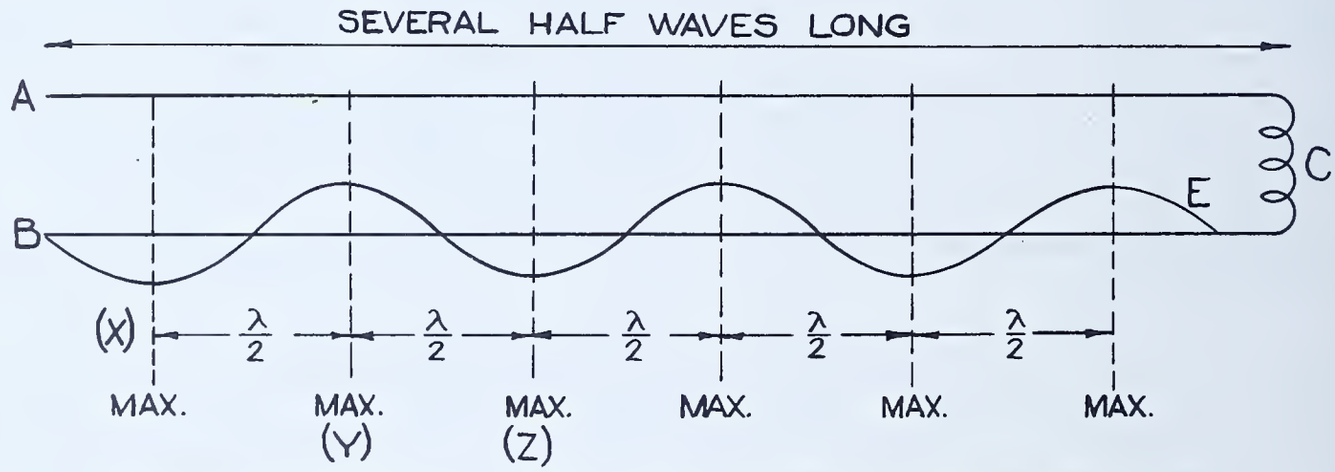

LECHER WIRE LINE - SHOWING VOLTAGE DISTRIBUTION

FIG.-3

Lecher wire lines are also used as a means of transferring the r-f energy from the transmitter proper to a remotely located antenna for radiation into space. Very little loss in energy transfer occurs since the inherent losses of a well designed line are small.

The Lecher wire line shown in Fig. 3 is used for frequency measurements. If the wires A and B are left open or short circuited at the end of the line and the line is coupled to the transmitter by coil C, voltage maxima* will be found to appear at half-wave length separations along the line.

* Voltage maxima are the points of the highest r-f voltages along the length of the line as found by exploring the field around the line with a neon lamp or any other r-f voltage indicator.

These points may be determined by use of a neon lamp or any other r-f voltage indicating device (see Reference D, "R-F Voltage Indicators"). Usually each point is marked with string or chalk, as found. For sake of positive location, at least three maxima should be located along the line. The physical distance between these points is measured and converted into frequency in the following manner:

Measure the distance in inches between the voltage maxima. Assume that this is a distance of 118.11 inches for half-wave length ($\lambda \div 2$):

Therefore, $\lambda \div 2 \times 118.11 = 236.22$ inches

Since 1 meter = 39.37 inches

$$236.22 \text{ inches} = \frac{236.22}{39.37} = 6 \text{ meters}$$

Since $f = \dfrac{300{,}000}{\lambda}$ where f = frequency in kc. and λ = wavelength in meters.

$$f = \frac{300{,}000}{6} = 50{,}000 \text{ kc. or } 50 \text{ mc.}$$

The accuracy of this method of frequency measurement depends upon the accuracy of the linear measurements of distance between two adjacent voltage maxima.

C. Transmission Lines

Transmission lines are of two types, the tuned (resonant) type and the untuned (non-resonant) type. In the tuned type shown in Fig. 4A and B, operation depends upon the lines being adjusted to some whole number multiple of a quarter-wavelength in order to accommodate the voltage and current maxima which will appear on this type of line. Rough adjustment is made by making the length of the transmission line approximately the same as its electrical length or some multiple of its quarter-wavelength. Fine adjustment is made by means of capacitors C_1 and C_2 which also permit operation on frequencies which are slightly different from that for which the line has been cut.

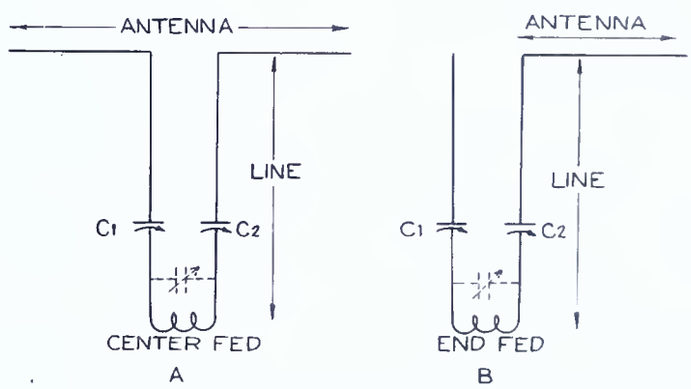

TWO APPLICATIONS OF LECHER WIRES AS TRANSMISSION LINES
FIG.-4

Since the voltage and current distribution on the antenna proper is such that the maxima will occur at specific points, it is evident that the transmission line must also have its current and voltage maxima occurring in proper relation to those occurring at the point of attachment to the antenna.

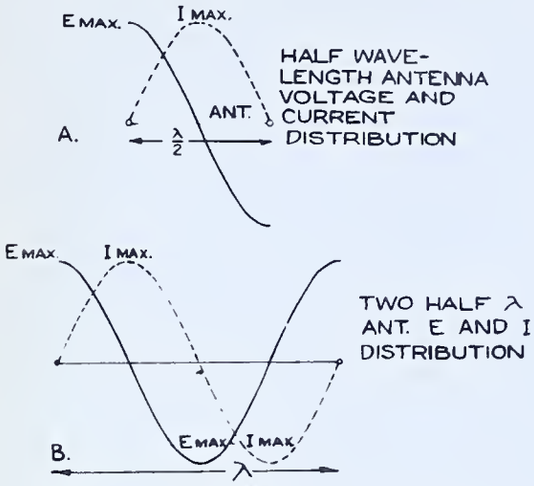

FIG.-5

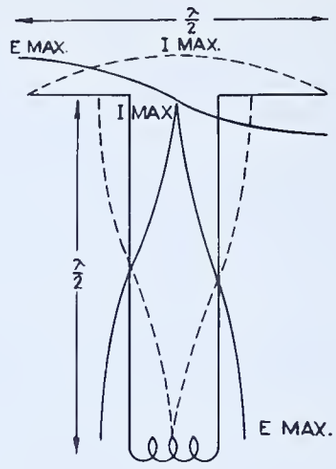

FIG.-6A

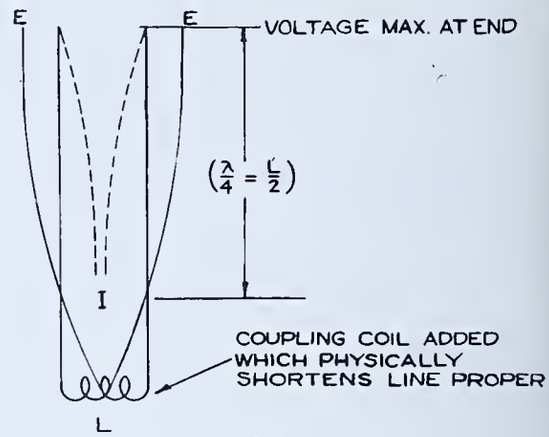

FIG.-6B

Fig. 5A and B shows a half-wavelength (λ÷ 2) and a full wavelength antenna. In the half-wavelength antenna the current maximum occurs at the electrical center of the antenna and a voltage maximum at each end. Therefore, a transmission line feeding energy to the center of a half-wavelength antenna should be so proportioned that a current maximum would occur at the end of the line attached to the antenna. See Fig. 6A. Similarly, for a line feeding the end of a half-wavelength antenna, it would be necessary to have a voltage maximum at the point of attachment. See Fig. 6B. The two types are known as current feed (6A) and voltage feed lines (6B).

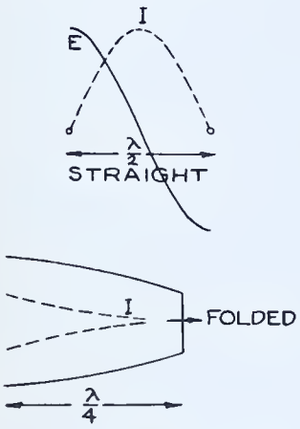

FIG. 7A

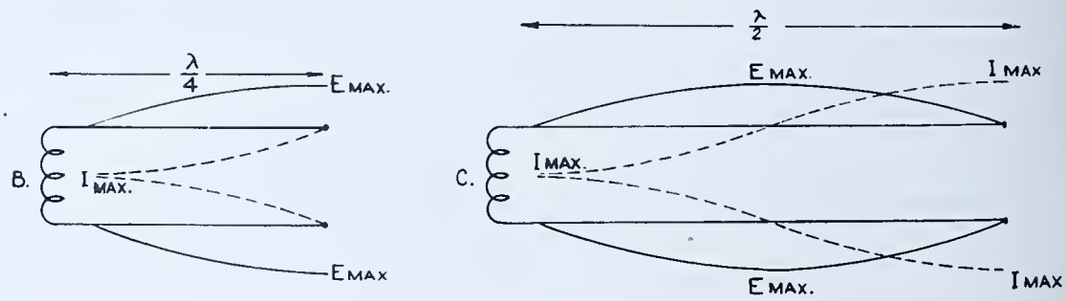

FIG.-7

The feed line is twice as long electrically as its "folded" length, due to the return path. The requirements of length will be different according to the whole number multiple which is used in calculating the total length; this is based upon consideration of available antenna space and operating frequency.

In a half-wavelength transmission line there will be a voltage maximum at one end and a current maximum at the other. In Fig. 7B the folded line is a quarter-wavelength long. This line, if extension is necessary, should be some odd number multiple of λ÷4, to fulfill the conditions for voltage feed. For the current feed line, it is necessary to fold a full-wavelength of wire to obtain a current maximum at the point of attachment. See Fig. 7C. If extension of this line is desired, the feeders must be some even multiple of λ÷4 to fulfill conditions necessary for current feed. The fact that the physical length and frequency of operation are directly related to each other limits the use of any one feed system to either its fundamental frequency or its harmonically related multiples; in many cases this is a serious handicap where operation on widely varying frequencies becomes a necessity.

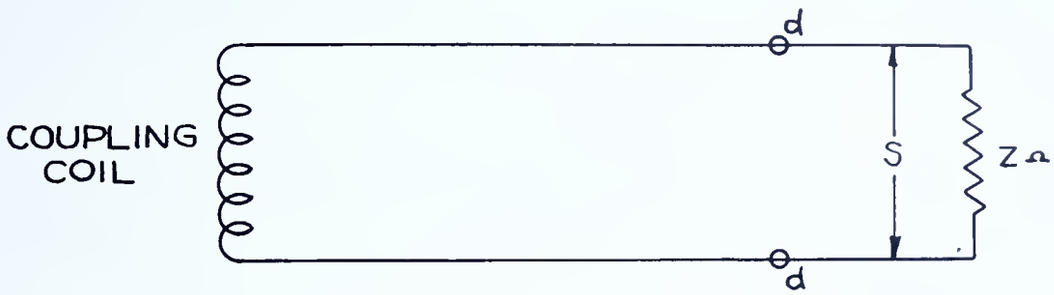

NON-RESONANT LINE
FIG.-8

When a Lecher wire transmission line (see Fig. 8) is terminated at the end remote from the transmitter by an impedance "Z", which is equal to the characteristic impedance of the line, no standing waves of current or voltage will appear along the line. When this condition of impedance matching is satisfied, tuning of the line is not necessary; the current and voltage distribution will be uniform throughout the length of the line and are not affected by physical differences of the length of line.

The open wire type line, composed of two conductors separated usually by ceramic spreaders, has a characteristic impedance which depends upon the diameter of the conductors and the distance between them.

Mathematically this is as follows:

$$Z_s = 276 \log_{10} \frac{2S}{d}$$

where Z_s = the impedance of the line
276 = a constant
S = the exact distance between wire centers
d = the diameter of the wire measured in the same units as S

For example:

Wire Size	IMPEDANCE Z (ohms)				
	200	300	400	500	600
#10 spaced	.269"	.621"	1.44"	3.31"	7.62"
#14 spaced	.169"	.391"	.903"	2.08"	4.79"

It is apparent that the characteristic impedance of such lines is high compared to the average value of 72 ohms for the center impedance of a half-wave antenna. In order to transform successfully the impedance of the line to that of the antenna, a matching transformer of some type must be used. See Fig. 9.

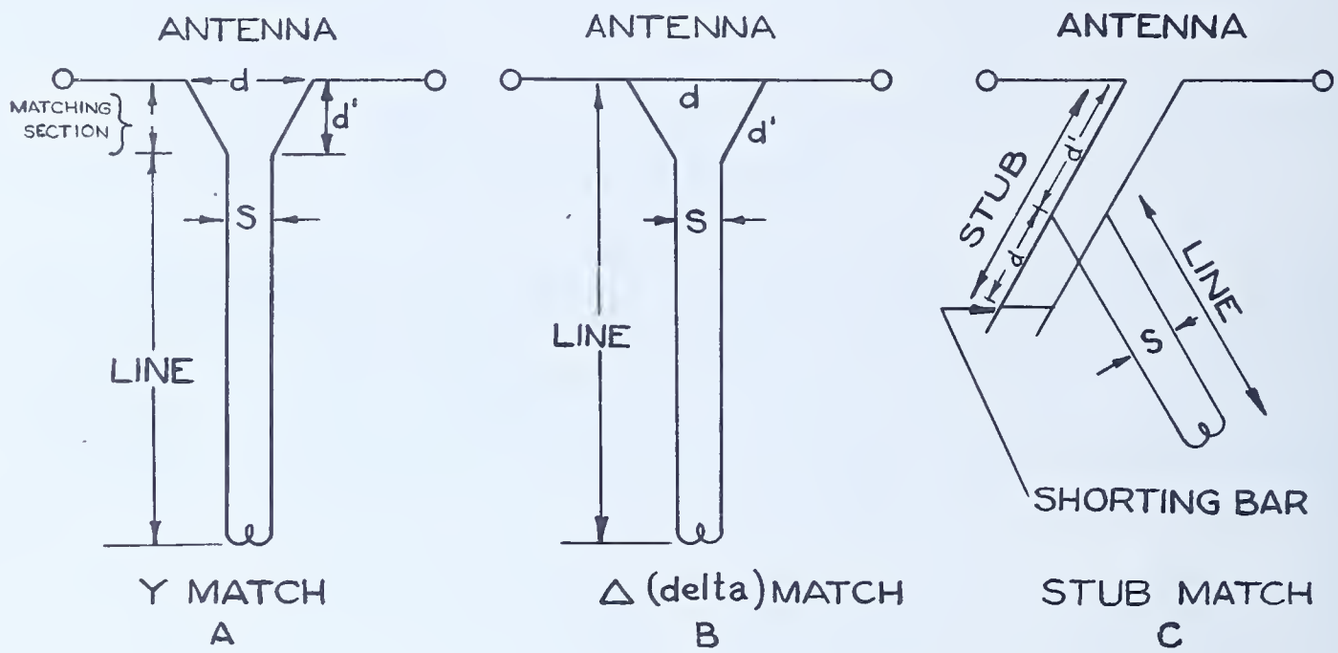

FIG.-9

This unit can be of several types; namely, (1) matching stubs, (2) Y matching connections, and (3) Δ (delta) matching connections any of which may be used as impedance matching transformers. In the Y and Δ type matching sections (Fig. 9 A and B) the impedance match (transformation) between the line and antenna is varied by changing the distance d or d^1 until standing waves along the line are eliminated.

In the stub matching section (Fig. 9C) the ratio of distances d and d^1 is varied until the standing waves disappear. It is well to remember that mis-matches of impedance can only be corrected at the antenna (termination) end of the line, since the coupled (transmitter) end will have no effect upon this condition.

To adjust Lecher wire lines, measurements of physical length, spacing, and diameter of the conductors must be made to conform to the conditions set up under each specific application. Checks for standing waves, uniform voltage, and current distribution must be made to determine whether the line is functioning properly.

E. Low Impedance Transmission Lines (concentric cables and twisted pair, EO-1)

It is often necessary to feed the transmission line into an antenna of relatively low impedance. From the design considerations for the Lecher wire (open) line, it is obvious that impedances below 200 ohms are difficult to obtain. As an alternative the concentric or coaxial cable and twisted pair line offer a means of solution. Relatively close spacing with respect to the size of the conductors is possible in this type line. Close spacing results in insulation problems which are somewhat difficult to overcome due to the very high voltages which may be present in the case of a slight mismatch of impedance.

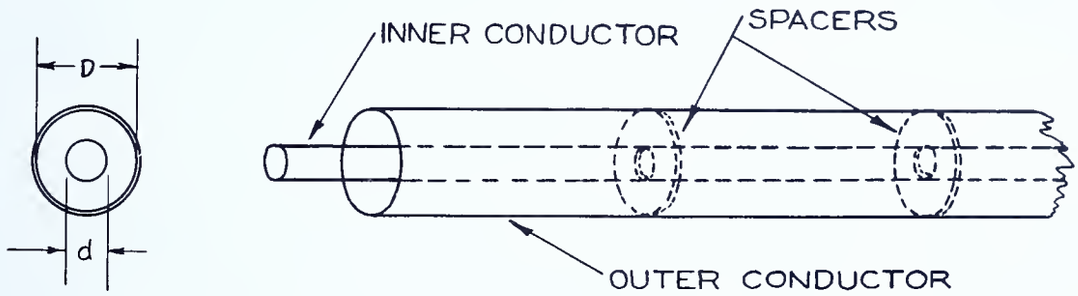

CONCENTRIC CABLE
FIG.-10

The concentric cable consists of two conductors, referred to as the outer conductor and the inner conductor. See Fig. 10. These are uniformly spaced by means of insulating materials; by either the button type insulation or a continuous flexible coating of insulating material which fills the space between the inner and outer conductors. In order that dielectric absorption losses may be kept at a minimum, this insulating material must be of excellent quality, usually polystyrene or ceramic buttons. In some instances the coaxial line is sealed at the ends and filled with nitrogen gas under pressure to provide better insulation.

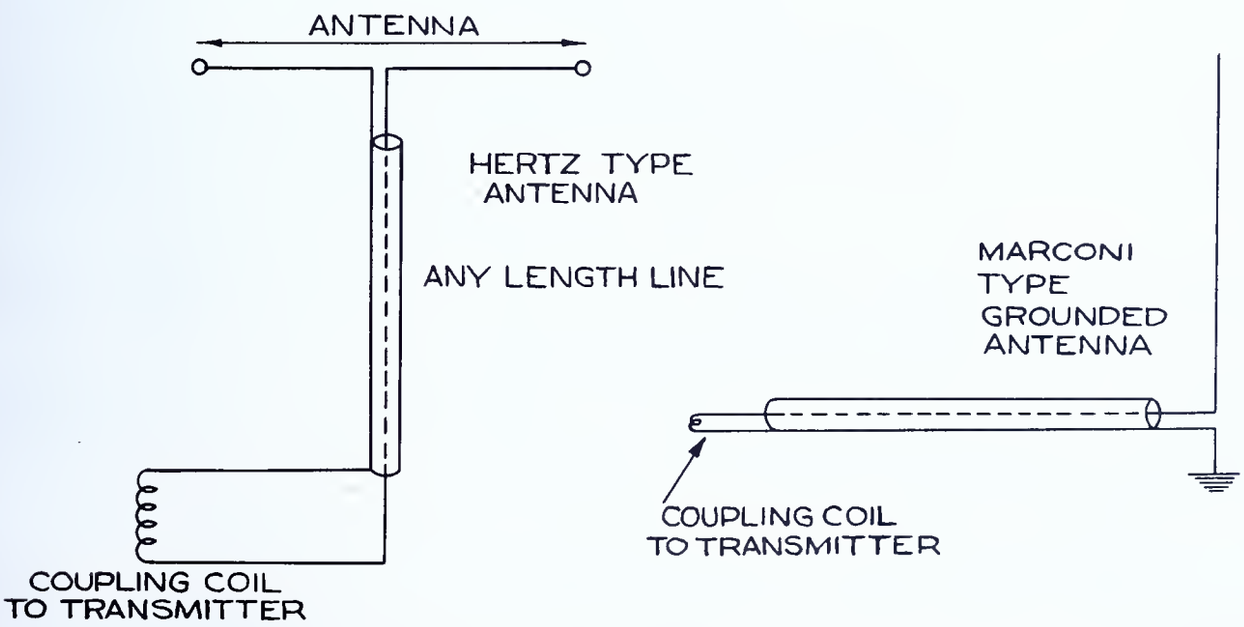

TWO APPLICATIONS OF CONCENTRIC LINES AS ANTENNA FEEDERS
FIG.-11

The characteristic impedance of the concentric line (Fig. 11) depends upon the ratio of the diameters of the two conductors and the spacing between them.

$$Z_s = 138 \log 10 \frac{D}{d}$$

where Z_s = the characteristic impedance
138 = a constant
D = the inner diameter of the outside conductor
d = the outside diameter of the inner conductor

An impedance as low as 40 ohms is practical with this type line. The characteristic ratios of diameters for different impedances are as follows:

Z	Diameter Ratio
41	2
65	3
83	4
96	5
107	6
116	7
124	8
131	9
138	10

Concentric cables should be operated as non-resonant lines, since standing waves which set up points of maximum voltage may seriously strain or break down the insulation of the line.

Twisted pair (EO-1) cable is made of rubber covered conductors twisted together. The diameters of the conductors and insulation spacing govern the characteristic impedance of the line. Insulation problems in this type line are rather acute because of the relatively close spacing; however, the advantage of flexibility warrants its use, where the power handled is not too great (500 watts or less). EO-1 cable is generally constructed to have a characteristic impedance of 72 ohms, although other values are sometimes encountered. Fig. 12 shows the method of feeding the center of a 72 ohm half-wavelength antenna.

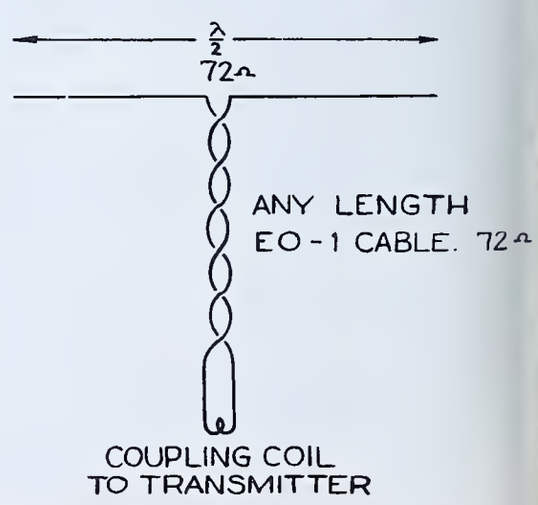

APPLICATION OF TWISTED PAIR EO-1 CABLE AS FEEDER
FIG.-12

F. The Use and Operation of the Absorption Type Frequency Meter

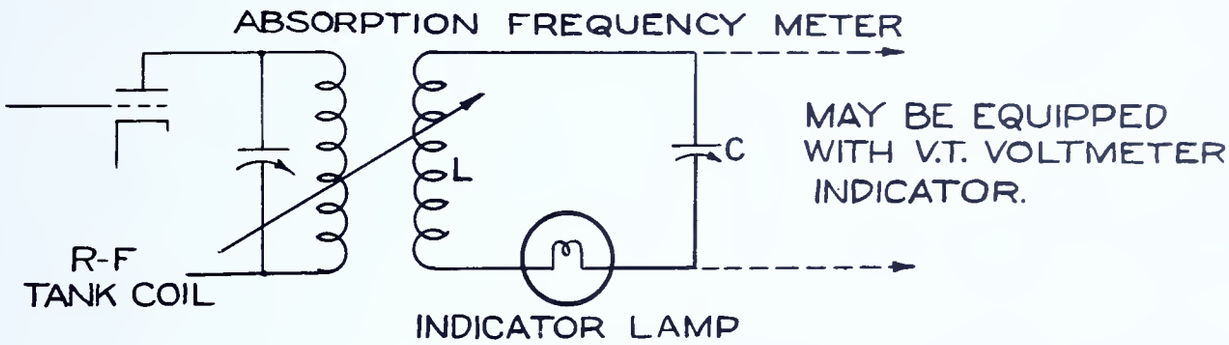

FIG.-13

In the absorption type frequency meter shown above, the LC circuit is adjusted to the frequency to be measured by selecting the proper inductance L and by setting the capacitor C to the value of capacity to produce resonance as indicated by the r-f indicator. This indicator may be a small lamp, connected in series with L and C to indicate when maximum current is flowing, or it may be a vacuum tube voltmeter to measure the r-f voltage across capacitor C. Of the two, the vacuum tube voltmeter indicator is more sensitive and permits much closer adjustment of the LC circuit to exact resonance.

The capacitor scale is calibrated in terms of frequency for each coil used (L), and plotted as a calibration curve or marked directly on the dial. When resonance is indicated by a peak reading on the indicating device, the frequency may be computed from the capacitor dial readings. Since this type of circuit discriminates against harmonics to a large degree, it is possible to determine whether or not the frequency of the r-f voltage is the fundamental.

In practice, the inductance L is coupled to the source of r-f voltage to be measured, by placing it in inductive relationship to the r-f field about the source of voltage. See Fig. 13. The capacitor C is varied to produce resonance, and the value of frequency is then read on the calibrated dial of the capacitor.

G. Field Strength Meters

A field strength meter is useful in adjusting the radio transmitter prior to operation, since it gives a relative measurement of the strength of the r-f field being radiated into space. In the more elaborate meters of this type, it is possible to make absolute measurements of field strength in microvolts per meter; however, for ordinary work, relative measurements of field strength are sufficient.

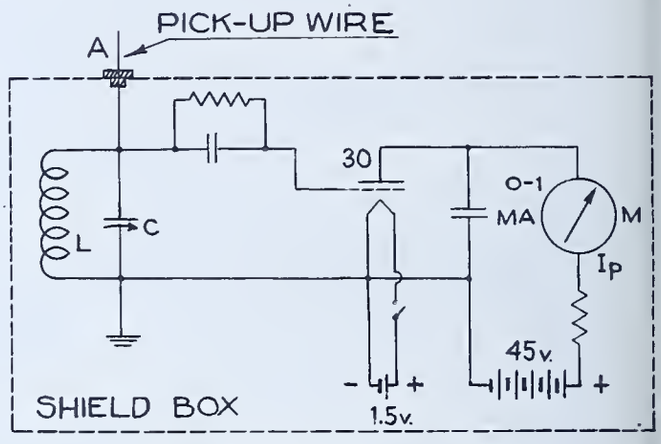

FIELD STRENGTH METER
FIG.-14

A field strength meter comprises a tuned LC circuit, tunable to the frequency of the radiated field, and a sensitive vacuum tube voltmeter type indicator. All components including batteries are completely enclosed in a shield box to prevent r-f energy pick-up by means of other than the pick-up wire A, Fig. 14. The field strength meter is placed a considerable distance from the radiator of the r-f energy and tuned to resonance with the r-f signal. Exact tuning as indicated by the maximum dip of the indicator is necessary. The indicator dip will be proportional to the strength of the r-f field at the point of measurement.

Some specific uses of the field strength meter are: (1) determining the pattern of the radiated field about an antenna (Fig. 15), (2) as a measuring device in the adjustment of a directional antenna, (3) measuring the strength of stray r-f fields, and (4) as a very sensitive neutralization indicator.

Fig. 15 shows a typical plot of field strength measurements in the horizontal plane around a horizontal half-wavelength antenna, taken at a distance "d" from the center of the antenna. The concentric circles indicate relative units of field strength.

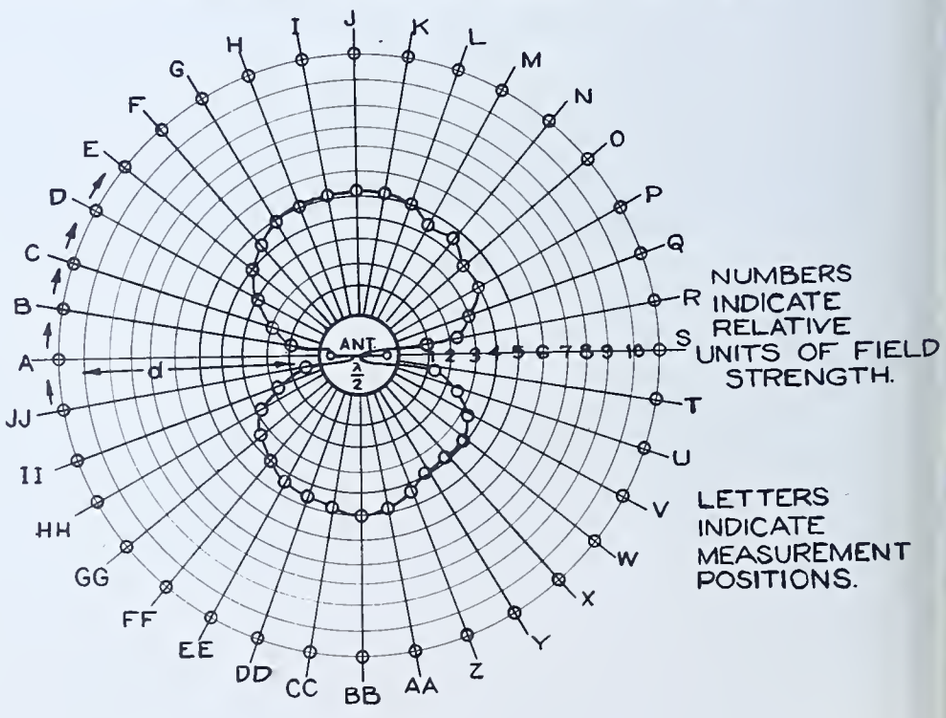

FIG.-15

H. Use and Operation of the Heterodyne Frequency Meter

For very accurate determination of the frequency of the generated r-f voltage, the heterodyne type frequency meter is employed.

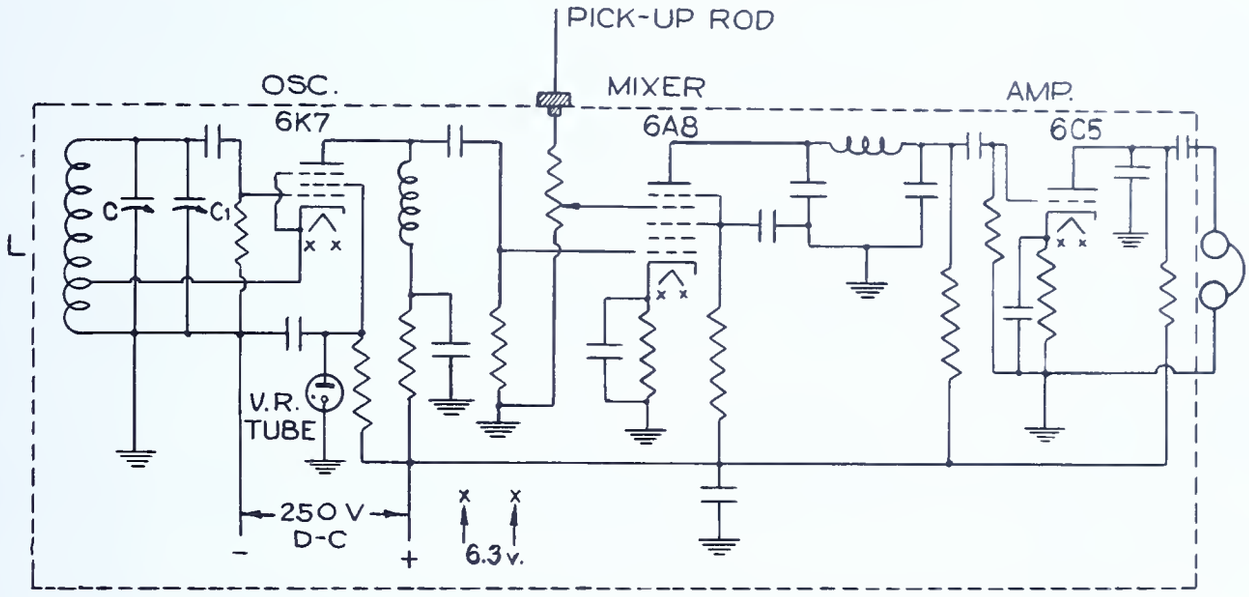

SCHEMATIC OF HETERODYNE TYPE FREQUENCY METER
FIG.- 16

The heterodyne frequency meter utilizes a variable frequency oscillator which is very stable in operation when once set. The dial of this oscillator is accurately calibrated in kilocycles and their fractional parts. Either the fundamental or harmonic frequencies of the oscillator may be used in determining the frequency of an unknown r-f voltage. The r-f voltage generated by this oscillator is injected into a mixer tube along with r-f voltage from the source to be measured; these two voltages when slightly different in frequency will set up a beat note which is amplified by an audio amplifier and heard in the headphones. When the two frequencies are exactly the same, no tone will be heard; and a condition of zero beat will exist. To differentiate this condition from off-frequency tuning, the source frequency or the frequency of the heterodyne oscillator should be varied by tuning it slightly higher or lower. A tone should be then audible. If no tone results from changing the tuning, the instrument is not tuned to the frequency to be measured.

The heterodyne frequency meter must be totally shielded and be equipped with a well regulated power supply in order to avoid variations in the heterodyne oscillator frequency. The dial for tuning should be of the vernier type to permit precise adjustment and must be accurately calibrated. With these conditions existing, frequency measurements with tolerances of less than 100 cycles are easily made by the zero beat method.

In order to assure good stability during measurements, it is advisable to allow the frequency meter to heat up for a half hour or so prior to measurements in order to minimize temperature drift. The heterodyne frequency meter may be used: (1) to measure frequency drift and operating frequency, (2) to check calibration of oscillators and receivers, and (3) to check audibly the quality of the transmitted signal by using the instrument as a listening monitor.

ADJUST A TRANSMITTER AND ASSOCIATED EQUIPMENT

General Information:

The importance of exact transmitter adjustment cannot be overemphasized. The proper functioning of the transmitter depends entirely upon this care. In communication work, changing the frequency is often required. The worker must be familiar with adjustment procedure. The purpose of the job is to make such adjustments as are required to put the transmitter into operation. Major repairs would be performed as indicated in Job 9, "Transmitter Trouble Shooting".

The transmitter used in this job is assembled from the units constructed in previous jobs. It is probable, however, that a previously assembled transmitter will be available; the adjustments called for in this job should be applied to it.

Specifications:

Adjust the transmitter and associated equipment according to the outlined procedure.

Parts A, B, C, D, and E are for the cw transmitter.
Part F is for the radio-telephone transmitter.

Equipment needed:

1. Assembled transmitter, equipped for cw or phone operation as assembled in Reference T (or a commercial transmitter of similar design). The transmitter should consist of:

   a. Pi section antenna coupler
   b. Class C r-f amplifier
   c. Exciter unit
   d. Modulator unit
   e. Power supply unit

   The above parts should be mounted on an upright stand and connected. See Reference T.

2. Multimeter
3. Absorption frequency meter
4. Heterodyne frequency meter
5. Cathode ray oscillograph
6. Lecher wire line, 600 ohm characteristic impedance, at least 2λ long.

   Note: The lack of equipment of most shops necessitates substitution of the Lecher wire line for the coaxial cable which would probably be used under field conditions.

7. Field strength meter
8. Neon Lamp ($\frac{1}{2}$ watt)
9. Beat frequency oscillator, a-f
10. Dummy antenna (load rating to match transmitter output rating)
11. Communications type receiver

Procedure:

A. Prepare Transmitter for Operation

1. Insert the proper tubes and the crystal, and connect transmitter to power source.

2. Short the secondary of the modulation transformer to prevent any modulation.

3. Observe location of various controls and parts.

4. Check wiring to see that all connections are made.

B. Adjust Crystal-Controlled Oscillator

1. Turn on the oscillator power supply switches and make any necessary power supply adjustments to bring voltages within specified limits.

2. Close telegraph key and read the value of the oscillator plate current.

3. Rotate oscillator plate tank capacitor until the plate milliammeter dips, indicating resonance.

4. Adjust oscillator plate tank capacitor slightly to the low capacity (high frequency) side of resonance.

5. Observe any excessive r-f crystal current; if excessive, reduce by procedure outlined in Job 3.

6. Check for r-f voltage at plate tank inductance, using neon lamp. If no r-f voltage is present, re-check previous steps.

7. Make rough check of oscillator frequency, using absorption frequency meter.

8. Open and close key to check for quick starting of oscillation as indicated by smooth operation of plate milliammeter.

9. Observe wave form of generated r-f voltage to see that it is not modulated, using cathode ray oscillograph. Use wave-envelope connection. (Unit 7, Fig. 21B.) If modulation is present, consult instructor; this condition indicates need for repair.

10. Turn off the oscillator power supply.

Note: If the e.c.o. or self-excited type is used, proceed as for crystal-controlled oscillator, deviating from that procedure as follows: After Step 3, set the oscillator to the specified frequency by adjusting capacitor of the oscillator frequency control circuit to resonate it at that frequency (for this job use 3500 kc.). Check this setting by use of the absorption and heterodyne type frequency meter. Proceed then with Steps 4, 7, 8, 9, and 10.

C. Adjust Frequency Doublers

1. Open coupling link between doubler and final class C amplifier.

2. Connect excitation tap, or introduce coupling from oscillator to preceding stage.

3. Remove plate and screen grid voltage from frequency doubler.

4. Place driving stage in operation and measure value of grid current for frequency doubler, if such a measurement is possible.

5. Adjust driver tuning and coupling to the frequency doubler to produce the required value of grid current flow. This value is obtained from a transmitter tube characteristic chart.

   Note: Where tuned grid circuit is employed in frequency doubler, it must be adjusted for maximum grid current.

6. Apply plate and screen grid voltages to the frequency doubler.

7. Tune frequency doubler plate tank circuit to resonance at twice the frequency of the excitation voltage.

8. Check for r-f voltage at doubler plate tank with neon lamp. If no r-f voltage is present re-check previous steps (see B and C).

9. Check frequency of output voltage of the frequency doubler, using the absorption frequency meter.

   Note: Readjust oscillator frequency if necessary.

10. Key the oscillator and observe whether or not the oscillator starts freely. If it does not, or there is any erratic operation of either oscillator or doubler plate current meter, consult the instructor, since a need for repair is indicated.

11. Observe the carrier envelope of the r-f output voltage of the frequency doubler, using the cathode ray oscillograph. Use wave envelope connections.

    Note: This should be free from modulation. (Need for repair may be indicated.)

12. Turn off driver and doubler power supplies.

D. Adjust the Final Class C Amplifier

1. Couple the final class C amplifier grid circuit to the exciter plate circuit by means of the link coil.

2. Turn on the exciter power supply switches.

3. Check exciter stages for r-f output, using a neon lamp. If no r-f output is present re-check all previous steps.

4. Turn on the final class C amplifier filament supply switch.

5. Measure the final class C amplifier grid current. This should be about three times as great as the value listed in the transmitter tube characteristic chart for a 6L6 connected as a tetrode.

   Note: Apply filament voltage, but do not apply plate voltage to class C amplifier.

6. Adjust coupling and tuning of exciter stages to produce the required value of grid current (approximately 10 ma.) in the class C grid circuit.

   Note: Where a tuned grid circuit is employed in a class C amplifier, this must also be tuned to resonance.

7. Proceed with neutralization of class C stage as follows:

   a. Disconnect the antenna coupler connections to the plate tank coil of the final class C amplifier.

   b. Tune the plate tank circuit to resonance as indicated by the presence of r-f voltage in the plate tank or a change in grid current reading.

   Note: Use a neon lamp or a field strength meter as indicator.

   c. Alternately adjust the neutralizing capacitor, plate tank tuning and grid tank tuning until little or no variation in grid current occurs when the plate tank circuit is tuned through resonance.

   d. If the class C amplifier is of the tetrode type, disregard Steps (b) and (c). Instead, adjust the screen grid voltage until no appreciable variation is evident in the value of grid current when the plate tank is tuned through resonance.

8. Place a 5000 ohm 10 watt resistor in the B+ lead and close the class C amplifier plate voltage switch. This will apply plate voltage to the amplifier at reduced value. This protects the amplifier during the following steps.

9. Tune amplifier plate tank circuit to resonance; this is indicated by a decided dip in the plate current to about one-tenth the value obtained when the circuit is detuned.

10. Re-check tuning of grid and exciter tank circuits to produce required value of amplifier grid current.

11. Check the frequency of the output r-f voltage from the amplifier, using an absorption frequency meter.

12. Turn off the exciter and amplifier power supplies.

13. Remove the 5000 ohm 10 watt resistor from the B+ lead and repair the B+ connections to normal.

E. Loading the Class C Amplifier

Note: Perform the following operations, using successively: (1) Dummy antenna. (2) Pi section coupler connected to an open wire line terminated with a 10 watt lamp. (3) Twisted pair line or concentric cable line terminated with a 10 watt lamp.

1. Couple the load to the class C tank circuit. See Reference G, "The Dummy Antenna".

2. Turn on the transmitter to produce r-f output.

3. Adjust coupling and tuning of coupler as required to load class C amplifier to supply rated r-f power to the load. Refer to Job 4.

4. Alternately adjust plate tank and antenna tuning for exact resonance. This is to insure correct tuning which is indicated by minimum d-c plate current for greatest r-f output.

   Note: Pi section coupler adjustment procedure must be followed as given in Reference W.

5. Calculate d-c plate power input. Watts = $E_p \times I_p$. Record in notebook the value obtained for each of the three methods of loading given at top of page. When properly loaded, these results should be the same.

6. Calculate class C amplifier efficiency at the rated load.

$$\text{Percentage efficiency} = \frac{\text{Power output (watts)}}{\text{Power input (watts)}} \times 100$$

7. Calculate plate load impedance of class C stage

$$Z = \frac{E_b}{I_b}$$

   to be used as a basis for modulator matching.

8. Measure the frequency of the output r-f voltage, and check for frequency drift, using the heterodyne frequency meter.

9. Use the heterodyne frequency meter as a listening monitor. Key the transmitter and observe any chirpy operation or carrier modulation that may be present.

10. Adjust all tuned circuits to clear these up as well as possible.

F. For Radio Telephone Operation

1. Make necessary preliminary adjustment to produce the required value of grid excitation (current, approximately 10 ma.) to the class C amplifier. See Step 6, Part D, of this job.

2. Remove the short from the secondary of the modulation transformer.

3. Connect the secondary of the modulation transformer in the class C amplifier plate circuit to provide nearest correct impedance match between modulator and class C tubes as found in calculations from Step 7, Part E.

4. Connect cathode ray oscillograph to obtain trapezoidal pattern. See Fig. 21A, Unit 7.

5. Feed a 400 cycle audio voltage into the input of the speech amplifier-modulator unit to provide a source of modulation.

6. Turn on the r-f section of the transmitter and adjust class C amplifier for specified output to the dummy load.

7. Turn on the power supply of the speech amplifier-modulator unit.

8. Advance the speech amplifier gain control until proper patterns are obtained for the following conditions of modulation:

   a. Less than 100 per cent
   b. More than 100 per cent
   c. 100 per cent

9. Note any peculiarities of the patterns obtained and analyze the cause of these deviations by comparing them to the patterns shown in Unit 7.

10. Vary the position of the audio gain control and observe the change in power delivered to the dummy antenna, as modulation is alternately removed from, and applied to, the class C amplifier. This shows the effect of changes in strength of modulation.

11. Remove the beat frequency oscillator and connect a crystal microphone or phono-pickup to the proper input terminal of the speech amplifier.

12. Modulate the transmitter by speaking into the microphone, or operating the phono-pickup, and advancing the audio gain control.

13. Check the intelligibility of the transmitted signal, using as a listening monitor a communications receiver tuned to the transmitter frequency.

QUESTIONS

Place the answers to these questions in your notebook or on form as directed by instructor.

1. Which unit in the transmitter controls the frequency of the generated signal?
2. Of what use and importance is the dummy antenna in transmitter adjustment?
3. Why are amplifiers used following the frequency control unit?
4. What are the grid bias voltages required for class A, B, or C operation?
5. What are the chief causes of frequency drift, chirpy signal, and modulated carriers in the r-f section of the transmitter?
6. How are the absorption and heterodyne frequency meters used in transmitter adjustment?
7. How does one determine whether or not the oscillator is producing r-f voltage output?
8. What is the purpose of the pi section coupler?
9. Explain the adjustment procedure for pi section couplers.
10. What are some of the applications of Lecher wire lines?
11. What should be the length of an open wire (Lecher wire) line which is used to feed the end of a half-wavelength antenna when the antenna and transmitter operate on 3000 kc.?
12. What are the restricting dimensions of: (1) A non-resonant open wire line? (2) A concentric cable? (3) A twisted pair line?
13. What measurements can be made by use of the field strength meter?
14. How do these measurements affect the actual performance of the transmitting system?
15. Why is the oscillograph used in checking modulation?
16. What are the conditions necessary for 100 per cent modulation of the class C amplifier?
17. What are the requirements of grid excitation for the class C amplifier? How is the value of excitation generally measured?
18. How does one compensate for the effects of coupling on a tuned circuit?
19. Write in outline form the step by step procedure for placing a transmitter in operation.

References:

Everitt, W. L. et al., Fundamentals of Radio, pp. 231-241, 285-313, 369-391.

Henney, K., Principles of Radio (Fourth Edition), pp. 174-180, 324, 511-514.

The Radio Amateur's Handbook (Any Edition), A. R. R. L., Chapters on Transmitter Adjustment, Transmitter Construction, Measurements and Measuring Equipment, R-F Transmission Lines, Antenna Construction.

The Radio Handbook (Any Edition), Editors and Engineers, Chapters on Transmitter Adjustment, Transmitter Construction, Transmitter Design, Test and Measuring Equipment, Antenna Theory and Operation, Transmitting Tubes.

UNIT 9

TRANSMITTER TROUBLE SHOOTING

Reference X — Methods Employed in Transmitter Trouble Shooting. Page 174

JOB SHEET 9 — TRANSMITTER TROUBLE SHOOTING. Page 178

I. Correction of Tube Faults. Page 179

II. Correction of Resistance Values. Page 179

III. Voltage Analysis. Page 185

IV. Correction of R-F Signal Voltage Conditions. Page 186

V. Correction of Modulation Troubles. Page 188

METHODS EMPLOYED IN TRANSMITTER TROUBLE SHOOTING

The Transmitter

Radio transmitters are composed of several units which are either combined on a single chassis or constructed as separate sections and connected by means of cables. These units usually consist of an r-f section and a modulator section which are supplied with the required a-c and d-c power from one or more power supply units.

The power supply must provide the necessary heater, plate, screen grid, and grid bias voltages required by the r-f and modulator units. The portioning of the d-c voltages is accomplished by a system of voltage dividers which generally are adjustable.

The r-f section usually consists of a frequency control unit, which may be either a self-excited or a crystal-controlled oscillator, followed by one or more r-f amplifier stages which may or may not perform the function of frequency multiplication.

In the case of transmitters designed for telegraph communication, a key is connected to start and stop the generation of r-f output. In the radio-telephone transmitter a modulating unit consisting of a microphone and speech amplifier is used to vary the r-f carrier.

The transmitter trouble shooter must recognize and understand:

(1) The symptoms by which troubles are indicated.
(2) The procedures for locating the source of the trouble.
(3) How to apply proper corrective measures.

The functions of the transmitter circuits should be clearly understood before proceeding with the job of trouble shooting. This is best done by consulting the schematic of the particular transmitter with consideration as to where the cause of the observed trouble could develop. At the same time, one should become familiar with the physical layout and wiring of the transmitter to make the location of parts easy.

Troubles which develop in a transmitter can be isolated into one or more of the units previously described, and it is through static and dynamic tests of the several units that the source of trouble may be located.

I. Static Tests

The testing procedure to locate the source of failure caused by such items as tubes, as well as by resistance and supply voltage conditions, may be considered as static tests since they are not dependent upon the signal voltage. The units are turned on to make a voltage analysis, but should not be turned on for a resistance analysis. Testing the tubes should be the first step in this procedure since it will quickly ascertain whether the failure is due to defective tubes.

Resistance Analysis

A resistance analysis of each of the several transmitter units must be made with comparison to specified values as shown on the schematic diagram of the transmitter. The resistance analysis locates such errors as open and short circuits in the various units of the transmitter. The value of resistance between the various connections in the transmitter circuits must be compared to the required value as shown on the schematic. If a deviation is noted, the circuit being measured must be broken down into smaller units to locate the particular part in error. Generally, this process is quite simple since most of the individual circuits contain only a few parts. However, in some instances other circuits are connected in parallel with the defective one; this requires that the two circuits be separated from each other to determine which one is in error.

The resistance analysis procedure should be carried through for each unit of the transmitter, and such repairs and replacement of parts made as are required to provide correct resistance values between points.

Voltage Analysis

In order to determine where troubles in voltage distribution are located, a voltage analysis is made. To perform this operation, the various units of the transmitter must be connected and the transmitter turned "on". The output voltages at the power supply terminal are measured, using the ground as the common reference point for measurement. The power supply delivers voltage to the several units, and these voltages should next be measured at their terminals in each of the units. This indicates whether or not the necessary voltages for operating the several units are being delivered to the proper points. Since the transmitter has not yet been placed in actual operation, the voltages indicated may or may not be the same as those indicated on the schematic diagram. However, it is sufficient to know that approximately the correct operating voltages are present at the proper points.

II. Dynamic Tests

The presence of correct resistance and voltage conditions makes it possible to place the transmitter in operation provided the r-f circuit conditions are correct. These must be checked by means of a series of dynamic tests to follow the r-f voltage from the control source (oscillator) to the output of the final amplifier. The procedures of Jobs 7 and 8 are of considerable importance since the trouble shooter must be able to judge whether or not the transmitter is working properly.

A suggested order of tests is given in this job sheet. These tests indicate whether or not the several r-f and modulator units are operating properly. As the testing progresses through the several units, any indications of faulty operation which may be discovered must be investigated and the condition remedied before proceeding with the remainder of the job.

The more common of these faults are taken into consideration in this unit and should be thoroughly understood by the trainee. To cover every item of failure or trouble would be beyond the scope of this course; however, continued study and experience will make it possible to remedy the more difficult failures once the simpler types are understood and repaired.

After repair of the faults which have been located, the transmitter must be placed in operation to prove the worthiness of the repair and as a final check on the correctness of the work.

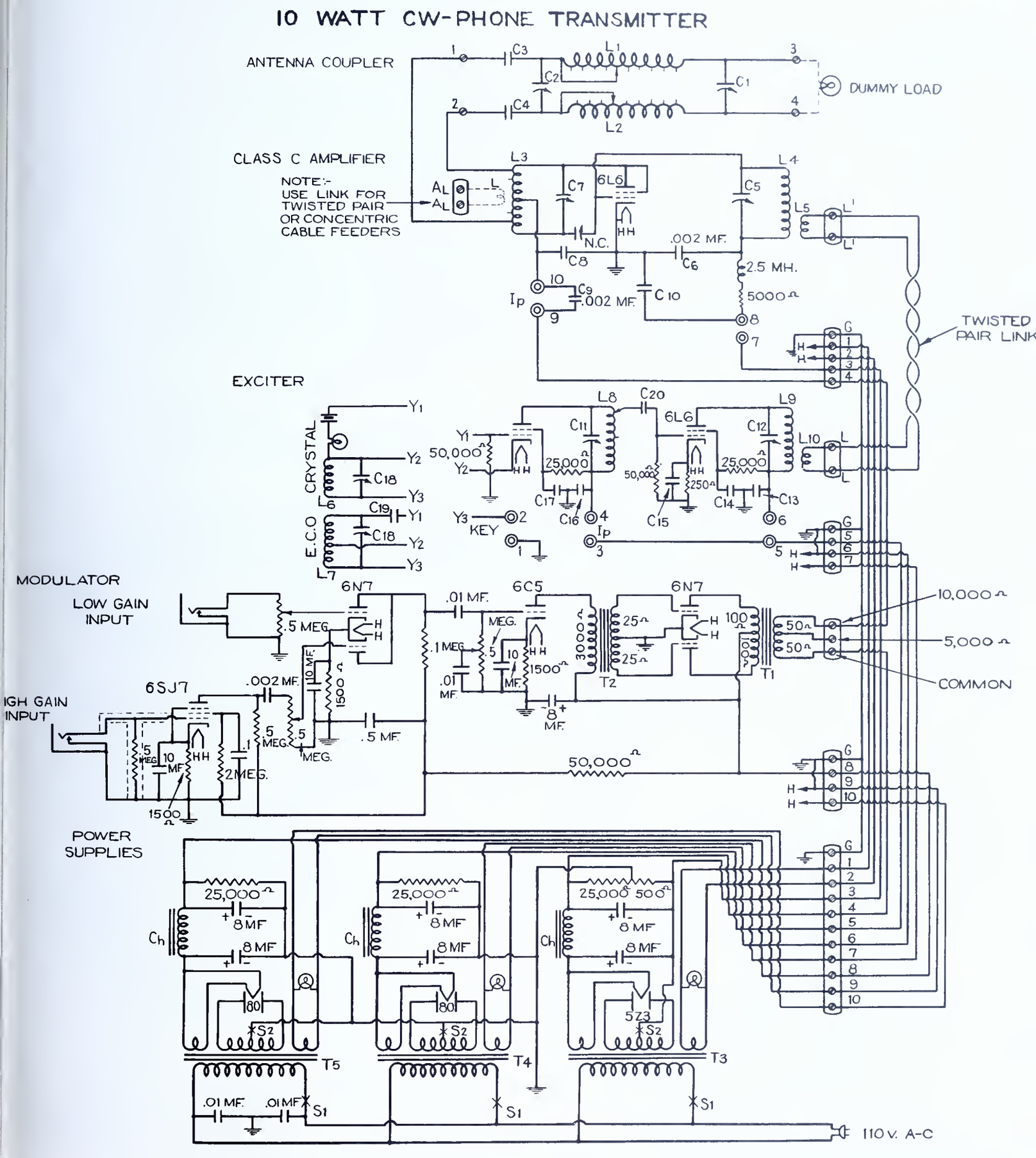
10 WATT CW-PHONE TRANSMITTER
ANTENNA COUPLER
DUMMY LOAD
CLASS C AMPLIFIER
NOTE:- USE LINK FOR TWISTED PAIR OR CONCENTRIC CABLE FEEDERS
TWISTED PAIR LINK
EXCITER
CRYSTAL
E.C.O
KEY
MODULATOR
LOW GAIN INPUT
HIGH GAIN INPUT
COMMON
POWER SUPPLIES
110 V. A-C

FIG.-1

TRANSMITTER TROUBLE SHOOTING

General Information:

The following trouble shooting procedures are to be performed on the transmitter assembled and used for Job 7. The schematic diagram of this transmitter is shown in Fig. 1, and the analysis procedure given is based on this schematic. A resistance and voltage analysis chart must be prepared by the trainee for the transmitter under consideration. The suggested forms for this job are to be copied in notebook from those on the Question Sheet. The troubles which are found and corrected are to be listed on this chart in addition to the regular resistance and voltage analysis data. From the entries on the chart, the instructor may judge the completeness and correctness of the trouble shooting procedures and repairs. A knowledge of the procedures given in previous jobs is necessary to carry through the complete trouble shooting job.

General Specifications:

1. Secure from the instructor an assignment to a transmitter which has faulty operation.

2. Study the schematic diagram of the transmitter (Fig. 1) to become familiar with resistance and voltage values. (Specified operating voltages should be obtained from the instructor for the transmitter used).

3. Inspect the transmitter to become familiar with the location of the various parts indicated on the schematic.

4. Locate and correct points of trouble as found; record in notebook the conditions which indicated need for each repair and the repair made.

Equipment needed:

1. Multi-range d-c milliammeter, 250 ma. maximum
2. Multimeter
3. Vacuum tube voltmeter
4. Cathode ray oscillograph
5. Absorption frequency meter
6. Heterodyne frequency meter
7. Neon lamp
8. Dummy antenna (10 watt load)
9. Beat frequency oscillator
10. Tube tester
11. Pick-up lamp and loop
12. Test leads
13. Complete transmitter

Tools needed:

1. Soldering equipment
2. Screw driver
3. Long nose pliers
4. Diagonal cutting pliers
5. Assorted socket wrenches

Materials needed:

1. Replacements for defective parts as required

Procedures:

I. Correction of Tube Faults

1. Check the location of the tubes; see that they are in their proper sockets.

2. Test each tube with a tube tester.

3. Replace faulty tubes with good ones.

II. Correction of Resistance Values

A. Power Supply

Specifications:

Make a resistance analysis of the power supply. Record values on a copy of form 2.

Procedure:

1. Remove the power supply unit from the rack.

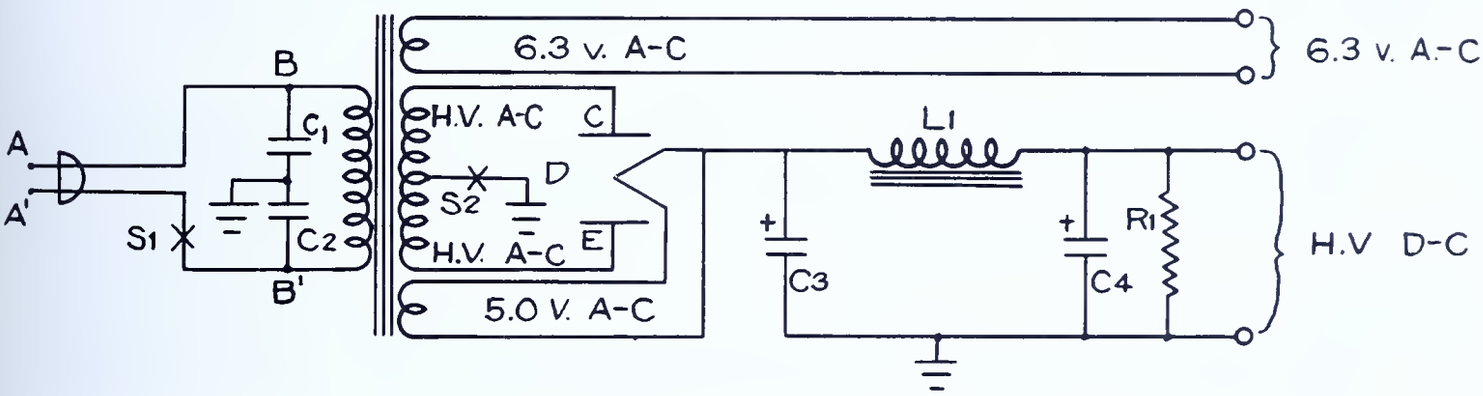

TYPICAL POWER SUPPLY CIRCUIT
FIG.-2

2. Set the ohmmeter to the low range and place its test leads across the line cord plug terminals A to A^1 (Fig. 2) and close switch S_1. This should result in an ohmmeter reading which is equal to the resistance of the transformer primary (usually 5 to 10 ohms). Zero ohms will indicate:

   a. The whole primary is short circuited.
   b. The line cord has developed a short circuit.
   c. Both capacitors C_1 and C_2 are shorted.
      To determine which item is causing the short, disconnect each one from the circuit and check individually.

3. Repair or replace any defective parts.

4. Measure the resistance from B to B^1 (Fig. 2).
   Infinite resistance reading will indicate an open primary winding which will require replacement or repair of the transformer. Normal reading will be that of the primary winding.

5. Measure the resistance from A to B and from A^1 to B^1 with S_1 closed.
   This should read less than 1 ohm. An infinite reading will indicate an open circuit in the line cord or switch. This will require replacement or repair of either the line cord or S_1.

6. Measure the resistance of high voltage secondary from points C to E (Fig. 2).
   This should equal the total resistance of high voltage secondary (usually 150 to 300 ohms). Less than this reading will indicate a short circuit in the secondary winding. An infinite reading will indicate an open circuit. Either case will require repair or replacement of the transformer.

7. Measure the resistance from C to ground and from E to ground with S_2 closed.
   These two readings should be the same and each equal to one-half the total secondary resistance. If infinite resistance is indicated, check S_2 for continuity. If S_2 is good (shows continuity when closed), then either or both halves of the secondary are open and replacement of the transformer is necessary.

8. Disconnect the positive lead of each filter capacitor (C_3 and C_4) and the positive end of the bleeder resistor R_1 from the rest of the circuit. See Fig. 2.

9. Measure the resistance of the filter choke L_1.
   This should be equal to the rated resistance of the choke (generally 100 to 500 ohms). An infinite reading will indicate an open choke, necessitating replacement or repair of the choke.

10. Measure the insulation resistance of the choke L_1 from either choke lead to ground.
    This should show an infinite reading. A low resistance reading will indicate poor insulation and requires replacement of the choke.

11. Test capacitors C_3 and C_4 for short circuit and leakage resistance.
    These should show a value of 100,000 ohms or higher for electrolytic capacitors and infinite resistance for paper capacitors. Replace capacitors which show defects.

12. Measure the resistance of the bleeder R_1 across its terminals.
    This value should equal that of the specified bleeder resistance (25,000 ohms, which is usual for a 250 volt supply). Infinite reading will indicate an open resistor which will require replacement. Zero ohms will indicate a short circuit in the resistor unit. This may be remedied if it is an external short; if the short is internal, replacement of the resistor is necessary.

13. Repeat Steps 1 to 12 for each section of the power supply.

14. Replace power supply unit in rack.

B. Resistance Analysis of the Exciter Unit

Specifications:

1. Make a resistance analysis of the exciter unit.

2. Record values as taken on a copy of form 3.

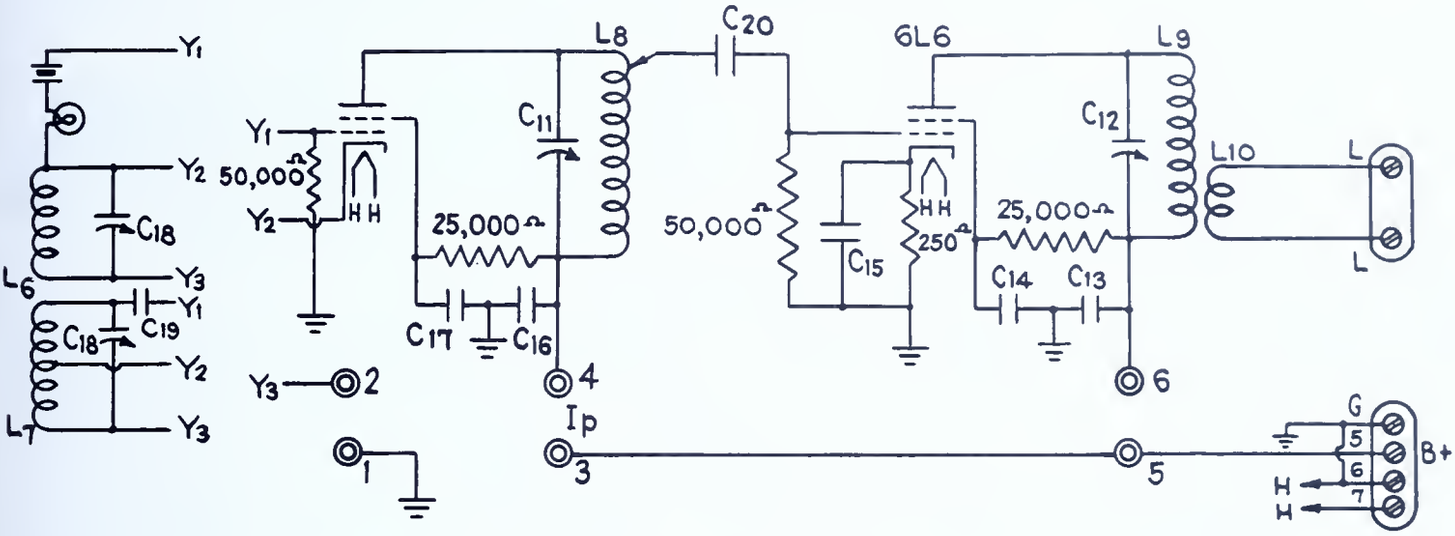

TRANSMITTER EXCITER UNIT
FIG.-3

Procedure:

1. Remove the exciter unit from the rack.

2. Short circuit key jacks by placing a jumper across them.

3. Measure the resistance from G_1 of the oscillator to ground. See Fig. 3. This should equal the resistance of R_1 (50,000 ohms). Infinite reading indicates R_1 open. Zero ohms indicates grounded grid circuit. Check wiring and crystal socket for short circuits. Repair or replace defective items.

   Note: If the oscillator is an e.c.o., the grid tank coil and capacitor must be checked for open and for short circuits.

4. Measure the resistance from cathode of the oscillator to ground. This value should be equal to that of L_6, which is quite low. An infinite reading will indicate that L_6 is open and necessitates repair or replacement.

5. Remove one lead of C_{18} and check for short while rotating the capacitor plates. If C_{18} is shorted, repair or replace with a new capacitor.

6. Check across pilot lamp socket for continuity. If no continuity exists, replace lamp and check the socket.

7. Check from each terminal of the pilot lamp socket to ground for short.

8. Check heater wiring for continuity by measuring from terminals marked (H-H) to each heater terminal at the tube socket (pins 2 and 7). Repair any open circuits which are found.

9. Short circuit plate current jacks 3 and 4 with a jumper.

10. Measure the resistance from the oscillator plate terminal to the B+ terminal. This should show less than 1 ohm resistance. Infinite resistance will show coil L_8 to be open, requiring repair or replacement.

11. Measure the resistance from G_2 to B+ terminal. This should equal the resistance of R_2 (25,000 ohms). Infinite reading will indicate R_2 to be open. Low resistance will indicate: (a) a short circuit in the wiring on the tube side of R_2, or (b) that both capacitors C_{16} and C_{17} are shorted. Repair or replace such faulty items as are indicated.

12. Disconnect the ground leads of C_{16} and C_{17}.

13. Check C_{16} and C_{17} for short circuits and leakage, and replace if faulty. Re-connect ground leads.

14. Remove the connection between capacitor C_{20} and L_8.

15. Test C_{20} for short circuit and leakage; replace if necessary. Re-connect C_{20} and L_8.

16. Measure the resistance from G_1 of frequency doubler to ground. This should be equal to the value of R_3 (50,000 ohms). Infinite resistance will indicate R_3 to be open. Low resistance will indicate a short circuit from G_1 to ground. Repair or replace as required.

17. Measure the resistance from cathode of the frequency doubler to ground. This should be equal to the resistance of R_4 (250 ohms). Infinite reading indicates R_4 to be open. Low reading indicates cathode shorted to ground or a defective capacitor (C_{15}). Repair or replace as required.

18. Open the connection from one side of capacitor C_{12} and check it for short circuit and leakage. If defective, replace with a new capacitor. Restore connection.

19. Short circuit the plate current jacks 5 and 6 with a jumper.

20. Repeat Steps 10 to 14 for P and G_2 circuits of the frequency doubler. See Fig. 3.

21. Check link coil L_{10} across its terminals for continuity. Repair as required.

22. Replace the frequency doubler in the rack.

C. Resistance Analysis of the R-F Amplifier

Specifications:

Make a resistance analysis of the r-f amplifier. Record values as taken on a copy of form 4.

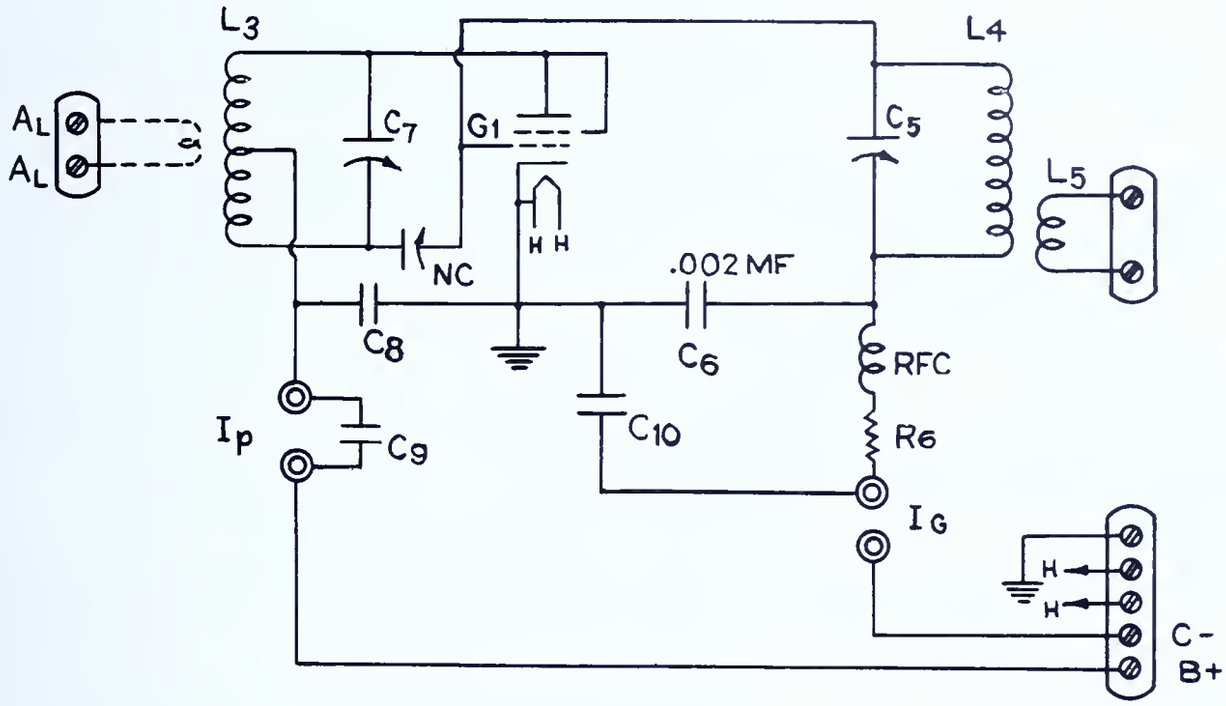

FIG.-4

Procedure:

1. Remove the r-f amplifier from the rack.

2. Check link coil L_5 (Fig. 4) for continuity by measuring the resistance across its terminals. If open, repair the coil.

3. Short circuit grid current jacks (I_g) with a jumper.

4. Measure the resistance from G_1 of the r-f amplifier to the C- terminal. This should be equal to the resistance of R_6. If infinite resistance is indicated, R_6, RFC, or L_4 may be open. Check each of these for continuity. Repair or replace as required. If the resistance reading is a low value, G_1 is grounded. Check the wiring and the insulation of capacitor C_6.

5. Measure the resistance between ground and the center tap of L_3. This should show infinite resistance. If a low reading is obtained, capacitor C_8 is leaky or shorted. Replace if necessary.

6. Measure the resistance from cathode to ground. This should show zero ohms. If high resistance is indicated, the cathode ground connection is faulty and should be repaired.

7. Short the plate current jacks (I_p) with a jumper.

8. Measure the resistance from plate terminal to the B+ terminal. This reading should be less than 1 ohm. If higher than 1 ohm or infinite, coil L_3 is open or a poor connection is present in the plate circuit. Repair or replace as necessary.

9. Test link coil L for continuity by measuring across its terminals. This should be less than 1 ohm. If high resistance is indicated, the link circuit is open and should be repaired.

10. Check the heater wiring for continuity by measuring from the HH terminals on the terminal strip to each heater terminal at the tube socket (pins 2 and 7).
    This should show less than 1 ohm. If an open circuit is present, repair wiring as necessary.

11. Replace the r-f amplifier in the rack.

D. Resistance Analysis of the Antenna Coupler

Specifications:

Make a resistance analysis of the antenna coupler. Record values as taken on a copy of form 5.

Procedure:

1. Remove the antenna coupler from the rack.

2. Check capacitors C_3 and C_4 for short circuits and leakage. Replace if necessary.

3. Check coils L_1 and L_2 for continuity. Repair if open.

4. Check capacitors C_1 and C_2 for short circuits and leakage. Repair or replace as necessary.

5. Replace antenna coupler in rack.

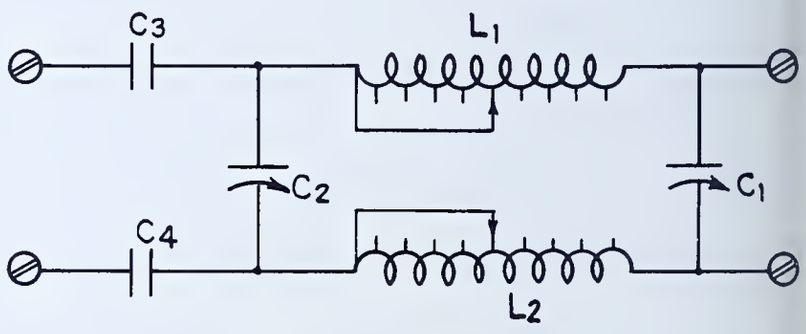

ANTENNA COUPLER
FIG.-5

E. Resistance Analysis of the Speech Amplifier-Modulator

Specifications:

Make a resistance analysis of the speech amplifier-modulator. Record values as taken on a copy of form 6.

Procedure:

1. Remove speech amplifier-modulator unit from rack.

2. Perform a resistance analysis of the unit, as outlined in Job 5.

3. Make required repairs as necessary and replace in rack.

III. Voltage Analysis

Specifications:

Refer to Safety Precautions for Voltage Readings, P. 56. Make a voltage analysis of the transmitter in operation. Record values as taken on a copy of form 1.

Procedure:

1. Check cable connections at the terminal strips to make sure they all are as specified in Fig. 1.

2. Place required tubes in their proper sockets.

3. Place the transmitter in operation.

4. Measure the terminal voltages at the power supply terminals and record on a copy of form 1.

5. Measure and record values of the terminal voltages at the tube sockets of the: (a) speech amplifier-modulator, (b) exciter, and (c) r-f amplifier tube sockets.

6. Compare socket terminal voltages to power supply terminal voltages. If the voltage reading is low or missing, an error is present in the unit where the faulty voltage reading is indicated or in the wiring connecting that unit to the power supply.

7. Check voltage at terminal strips of each unit to determine whether proper voltages are being supplied to that unit. These values should be equal to those at the output of the power supply.

8. Repeat resistance analysis of any faulty units to locate the cause of voltage failure.

9. Make necessary repairs to correct voltage conditions.

IV. Correction of R-F Signal Voltage Conditions

Specifications:

Check a transmitter for r-f signal voltage output, frequency, wave form, neutralization, power output, and frequency drift.

Procedure:

1. Turn on the exciter power supply.

2. Adjust the oscillator tuning capacitor until there is a decided dip in the plate current reading. This indicates that the oscillator is in operating condition.

3. Check the plate tank circuit for r-f output, using a neon lamp.
   If no output is obtained, check the condition of the crystal and plate tank circuit capacity and inductance. Repair or replace defective items.

4. Check the frequency of the r-f voltage, using an absorption type frequency meter.

5. Adjust the frequency doubler tuning to provide r-f output. Proper tuning is indicated at the point of greatest dip in the frequency doubler plate current meter.

6. Check the plate tank circuit of the frequency doubler for r-f output by means of a neon lamp.
   If the output is low, check the r-f excitation by varying the position of the tap on the oscillator plate tank coil.

7. Check the frequency of the frequency doubler r-f output, using an absorption type frequency meter.

8. Connect the cathode ray oscillograph to the r-f output of the exciter and observe the wave form of the r-f voltage.
   This should be free from carrier hum modulation. The presence of hum will usually indicate poor filtering in the exciter power supply and will necessitate checking the wave form of the power supply output.

9. Remove the oscillograph connections.

10. Turn on the heaters of the r-f amplifier power supply.

11. Adjust the r-f amplifier grid circuit tuning to provide the specified grid current through the grid milliammeter I_g.
    If the grid current will not come up to the specified value, adjust: (a) the link coupling to the exciter output, (b) grid bias voltage for the r-f amplifier, (c) neutralization of the r-f amplifier, and (d) tuning of the frequency doubler tank circuit.

12. Tune the r-f amplifier plate tank capacitor to resonance. This is indicated by the point of greatest dip in the grid milliammeter. Proceed as follows: Adjust the neutralizing capacitor (NC) and simultaneously rotate the control of the plate tank capacitor through the resonance setting until the grid milliammeter shows little or no deviation when the plate tank capacitor passes through resonance.
    If this condition cannot be obtained, look for one of the following faults: (a) Capacity coupling between plate and grid wires (incorrect lead dress). (b) Leaky tube insulation, both tube and socket are possible sources. (c) Leaky plate tank capacitor insulation. (d) Open plate or grid by-pass capacitors. These items should be checked and replacement made where required.

13. Apply plate voltage to the r-f amplifier by closing the plate circuit switch S_2.

14. Adjust the r-f amplifier plate tank capacitor to provide resonance as indicated by a dip in the plate milliammeter I_p.
    If the plate current does not fall to a low value (10 to 15 ma.), check the plate tank circuit for leaky insulation and proper ratio of inductance to capacity. Replace such items as may be faulty.

15. Check the plate tank circuit for r-f voltage output with oscillator key circuit closed and open.
    If r-f voltage is present with key circuit open, re-check neutralization.

16. Check the frequency of the r-f voltage output, using the absorption type frequency meter.
    If incorrect replace crystal, or in the case of the e.c.o. adjust grid tank circuit for proper frequency, and adjust the tuning of each stage of the transmitter to correct the error. Re-tune as necessary.

17. Couple a dummy load to the output of the antenna coupler.

18. Connect the antenna coupler to the r-f amplifier plate tank circuit as shown in Fig. 1.

19. Load the amplifier to provide rated input to the dummy antenna.
    If the amplifier will not load properly, re-check excitation to the amplifier grid circuit.

20. Check the output of the transmitter for frequency drift, using a heterodyne frequency meter.
    If drift is excessive: (a) when using the crystal oscillator, readjust oscillator cathode and plate tank circuit tuning, or replace the crystal to reduce the drift as much as possible. Do both if necessary. If temperature control is provided, replace control unit. (b) When using the e.c.o., adjust the screen grid voltage to such a value as gives minimum frequency drift. See Reference C.

V. Correction of Modulation Troubles

Specifications:

Check a transmitter for wave form of modulated r-f output. Adjust, if necessary, to obtain undistorted output at 100 per cent modulation.

Procedure:

1. Connect a beat frequency oscillator to the input of the modulator unit.

2. Couple the oscillograph to the output of the modulator unit to observe the wave form of the output voltage.

3. Turn on the modulator power supply.

4. Observe the wave form of modulator output.
   If distortion is present, signal trace the modulator unit to locate the source of the trouble; and make a resistance analysis of the faulty stage to locate the defective part.

5. Repair or replace defective modulator parts.

6. Connect the modulator output into the r-f amplifier plate circuit as shown in Fig. 1.

7. Connect the oscillograph to observe the wave envelope pattern of the modulated r-f voltage from the r-f amplifier.

8. Apply modulation to the r-f amplifier by advancing the modulator gain control to secure approximately 100 per cent modulation.
   If this modulation is not possible, check the following items: (a) Modulation transformer matching. (b) Radio frequency amplifier excitation. (c) Radio frequency amplifier loading. (d) Radio frequency amplifier neutralization. (e) Carrier hum.

9. Make such adjustments as are necessary to provide undistorted modulation of approximately 100 per cent.

10. Turn off the transmitter and the test equipment.

11. Return apparatus to stock room.

QUESTIONS

Place the answers to these questions in your notebook or on form as directed by instructor.

1. Name the causes of and remedies for excessive ripple voltage in the d-c output of a power supply.
2. How could leakage resistance in the filter choke insulation be located? What would remedy the situation?
3. The resistance measured from one rectifier plate to ground is 275 ohms and from the other 150 ohms. What is wrong, and what are the suggested remedies?
4. Referring to the complete transmitter schematic Fig. 1, assume that no d-c grid bias is present at the final amplifier grid; what are the possible causes and remedies?
5. The rated grid current for the final amplifier is 10 ma. d-c. The grid milliammeter indicates that 5 ma. are flowing. What are the causes and remedies for this condition?
6. The plate current of one of the class C amplifier stages shows only a small dip when the plate tank circuit is tuned to resonance. State the possible causes of this condition.
7. All voltages supplied to the crystal oscillator are found to be correct, but the unit will not oscillate. What may be wrong?
8. Upon inspection, the power transformer of one of the power supplies shows signs of having been excessively hot in operation; and the secondary windings are found to be open. What are the possible causes of this condition?
9. The electron-coupled oscillator is generating r-f output at 5020 kc. This stage is followed by a frequency doubler with an output of 15,060 kc. What is wrong with the tuned circuit of the frequency doubler?
10. In making a voltage analysis of the class C amplifier, no voltage is present at the plate terminal of the tube. Analyze this trouble and state all possible remedies.
11. The class C amplifier will not neutralize properly. What are the causes of this trouble, and what remedies would be appropriate?
12. What condition would indicate insufficient grid excitation to an r-f amplifier?
13. What are the causes of, and remedies for excessive frequency drift?
14. In the schematic diagram Fig. 1, what would be the effect of an open 500 ohm section of the class C amplifier power supply bleeder?
15. The filament and plate voltages of the speech amplifier are correct, and the modulator stage components are found to be in working order. No output from the modulator is obtained when the audio gain control is advanced to full-on position. What is the trouble, and what are all the possible causes?
16. A high hum level is present when the microphone cord is attached to the speech amplifier unit but not present when the microphone cord is removed. What are the causes and remedies for this condition?
17. Turning the high input gain from off to full-on causes no change in audio output. What are the possible causes of this condition?
18. Heater voltages at the power supply are correct, but the exciter tubes do not light, although the resistance analysis of the exciter unit is correct. Where is the cause of this trouble?
19. An electro-coupled oscillator is designed to cover a band of frequencies from 2000 to 2500 kc. Checking with the frequency meter shows that the oscillator under repair covers 1900 to 2310 kc. What is the cause of this condition? How can it be remedied?
20. The plate by-pass capacitor C_8 in the schematic Fig. 1 is open. How would this effect the operation of the transmitter?

21. What would be the effect on the output of the modulator section if a cathode by-pass capacitor in the driver stage were open? How could the open capacitor be located?
22. Why is it advisable to make a resistance analysis before making a voltage analysis?
23. Proper transfer of energy from the final class C amplifier to the dummy load cannot be effected. What are the general causes of this trouble and how can it be remedied?
24. How can it be determined whether or not the class B modulator is receiving sufficient driving power from the driver stage?
25. What indication would show incorrect impedance match between the class B modulator and the modulated r-f amplifier?
26. If the rectifier tube in a power supply is burned out, what diagnosis and repairs should be made?
27. Explain how to locate open or short circuits in the cables connecting the power supply to the various units.
28. The class C amplifier cannot be loaded to its rated output in watts. State the causes and remedies.
29. The resistance between the plate terminal and the B+ terminal in the frequency doubler stage Fig. 1 reads infinity. What is the cause of this condition?
30. In a telegraph transmitter, the oscillator does not start instantly upon closing the key. How could this condition be recognized from instrument indications, and what remedies would be appropriate?

FORM 1 VOLTAGE ANALYSIS - FOR PART III

Voltage Measured	Points of Measurement	Measured Value	Specified* Value
Final class C amp. filament	Terminals 1 and 2	v.	v.
Final class C amp. grid	" 3 and G		
Final class C amp. plate	" 4 and G		
Oscillator-doubler plate	" 5 and G		
Oscillator-doubler filament	" 6 and 7		
Modulator B+ supply	" 8 and G		
Modulator Filament	" 9 and 10		
Oscillator Heater	Osc. 6L6 socket pins 2-7		
Oscillator P	Osc. P to ground		
Oscillator G_2	Osc. G_2 to ground		
Oscillator K	Osc. K to ground		
Doubler Heater	Doubler 6L6 socket pins 2-7		
Doubler P	Doubler P to ground		
Doubler G_2	Doubler G_2 to ground		
Doubler K	Doubler K to ground		
Class C Heater	Class C 6L6 socket pins 2-7		
Class C P	Class C P to ground		
Class C K	Class C K to ground		
Class C G_1	Class C G_1 to ground		
Modulator Heater	Modulator 6N7 socket pins 2-7		
Modulator P_1	Modulator P_1 to ground		
Modulator P_2	Modulator P_2 to ground		
Driver Heater	Driver 6C5 socket pins 2-7		
Driver P	Driver P to ground		
Driver K	Driver K to ground		
Mixer Heater	Mixer 6N7 socket pins 2-7		
Mixer P_1	Mixer P_1 to ground		
Mixer P_2	Mixer P_2 to ground		
Mixer K	Mixer K to ground		
Speech Amp. Heater	Speech Amp. 6SJ7 socket pins 2-7		
Speech Amplifier P	Speech Amp. P to ground		
Speech Amplifier G_2	Speech Amp. G_2 to ground		
Speech Amplifier K	Speech Amp. K to ground		

* Obtain working voltage values from tube characteristic chart; consult reference book for values not shown in characteristic chart.

TABULATION FORMS

FORM 2 RESISTANCE ANAYLSIS - Part II, PROCEDURE A

Circuit Element	Point of Measurement	Measured Resistance	Specified* Resistance
Primary	Across primary terminals B-B[1]		5 Ω
Line Cord	Cord plug terminals to transformer or switch terminals.		< 10 Ω
Line Switch	Across switch terminals		< 1 Ω
Heater Secondary (6.3v)	Across 6.3v secondary terminals		< 1 Ω
Rectifier Filament Secondary (5.0v)	Across 5.0v secondary terminals		< 1 Ω
High Voltage Secondary	P_1 to P_2 at rectifier socket		275 Ω Approx.
Halves of High Voltage Secondary	P_1 to ground (S_2 closed) P_2 to ground		Approx. 137.5 Ω 137.5 Ω
Filter Capacitors C_3 C_4	Across C_3 or C_4 with one lead disconnected		>100,000 Ω >100,000 Ω
Filter Choke L_1	Across terminals of L_1 (with C_3, C_4 and R_1 disconnected)		Approx. 150 Ω
Bleeder Resistor	High voltage d-c terminal of bleeder to ground		25,000 Ω
Bleeder Resistor Sections	Across terminals of each bleeder section		500 Ω 20,000 Ω
Transformer Insulation	From each transformer lead to ground		∞
Choke Insulation	From each lead of choke to ground		∞

* < Indicated less than
> Greater than
∞ Indicates infinite resistance (open circuit)

FORM 3 RESISTANCE ANALYSIS - Part II, Procedure B

Circuit Element	Point of Measurement	Measured Resistance	Specified Resistance
Oscillator Control Grid	G_1 to ground		50,000 Ω
Oscillator Cathode Circuit	K to ground (1) Key Closed (2) Key Open		< 1 Ω ∞
Oscillator Screen Grid Circuit	G_2 to (1) Ground (2) Terminal 5 (B+)		∞ 25,000 Ω
Oscillator Plate Circuit	P to (1) Ground (2) Terminal 5 (B+)		∞ < 1 Ω
Oscillator Heater Circuit	Pins 2 and 7 on oscillator sockets to terminals 6 and 7		< 1 Ω
Doubler Control Grid	G_1 to ground		50,000 Ω
Doubler Cathode Circuit	K to ground		250 Ω
Doubler Screen Grid Circuit	G_2 to (1) Ground (2) Terminal 5 (B+)		∞ 25,000 Ω
Doubler Plate Circuit	P to (1) Ground (2) Terminal 5 (B+)		∞ < 1 Ω
Link Circuit	Across terminals of link coil		< 1 Ω
Crystal Circuit	(1) Across indicator lamp F (2) Across crystal socket (key closed)		35 Ω 50,000 Ω
C_{20}	G_1 of frequency doubler to P of oscillator		∞

FORM 4 RESISTANCE ANALYSIS - Part II, Procedure C

Circuit Element	Point of Measurement	Measured Resistance	Specified Resistance
R-F Amplifier Heater Circuit	Pins 2 and 7 or tube socket to terminals 1 and 2		< 1 Ω
R-F Amplifier Plate Circuit	P to (1) Ground (2) Terminal 4 (B+)		∞ < 1 Ω
R-F Amplifier Screen Grid Circuit	G_2 to P (connected)		< 1 Ω
R-F Amplifier Control Grid Circuit	G to (1) Terminal 8 (C-) (2) Ground		5000 Ω ∞
R-F Amplifier Cathode	K to ground		< 1 Ω
Input Link L_5	Across terminals of L_5		< 1 Ω
Antenna Link A_L	Across terminals A_L - A_L		< 1 Ω

FORM 5 RESISTANCE ANALYSIS - Part II, Procedure D

Circuit Element	Point of Measurement	Measured Resistance	Specified Resistance
Capacitors C_3 and C_4	Across terminals of capacitors C3 and C4		∞
L_1 and L_2	Across terminals of coils L_1 and L_2		(L_1) < 1 Ω (L_2) < 1 Ω
C_1	Across terminals of C_1 (Rotate C_1 from maximum to minimum.)		∞
C_2	Across terminals of C_2 (Rotate C_2 from maximum to minimum.)		∞

FORM 6 RESISTANCE ANALYSIS - Part II, Section E

Circuit Element	Point of Measurement	Measured Resistance	Specified Value
Input Amplifier Grid	G_1 of 6SJ7 to ground (with gain jack open)		5 megohms
Input Amplifier Cathode	K of 6SJ7 to ground		1500 Ω
Input Amplifier Screen Grid	G_2 of 6SJ7 to terminal 8		2.05 megohms
Input Amplifier Plate	P to terminal 8		.55 megohm
Low Gain Mixer Amplifier Grid	G_1 to ground volume control on G_1 to ground volume control off		.5 megohm < 10 Ω
High Gain Mixer Amplifier Grid	G_2 to ground mixer control on G_2 to ground mixer control off		.5 megohm < 10 Ω
6N7 Cathode Circuit	K to ground		1500 Ω
6N7 Plates	P to terminal 8		.15 megohm
Driver Grid Circuit	G_1 to ground (Turn tone control from zero to full on)		.5 megohm
6C5 Cathode Circuit	K to ground		1500 Ω
6C5 Plate Circuit	P to ground P to terminal 8		> 100,000 Ω 3000 Ω
Modulator Grids	G_1 to ground G_2 to ground		25 Ω 25 Ω
Modulator Plates	P_1 to terminal 8 P_2 to terminal 8		100 Ω 100 Ω
Modulator Plates	P_1 to ground P_2 to ground		> 100,000 Ω > 100,000 Ω

UNIT 10

THE CALIBRATION AND USE OF A VACUUM TUBE VOLTMETER

Reference Y — The Vacuum Tube Voltmeter. Page 194

JOB SHEET 10 — THE CALIBRATION AND USE OF A VACUUM TUBE VOLTMETER. Page 198

A. Calibrate a Vacuum Tube Voltmeter. Page 198

B. Measure Voltages with a V.T.V.M. Page 200

C. Calculate Gain-Per-Stage in an Audio Amplifier. Page 201

D. Test an I-F Transformer for Operating Conditions. Page 203

E. Test an Audio Transformer for the Ratio of the Primary to Secondary Turns. Page 205

F. Test the Impedance of an Output Transformer. Page 206

G. Measure Oscillator Grid Voltage. Page 208

Reference Z — Additional Uses of the Vacuum Tube Voltmeter. Page 210

THE VACUUM TUBE VOLTMETER

General Information:

The vacuum tube voltmeter (V.T.V.M.) is often called an electronic voltmeter. Some of these instruments measure only d-c voltages while others may be adapted to measure resistance and current as well as a-c and d-c voltages. The V.T.V.M. usually has a range switch and correspondingly calibrated instrument scales so that a comprehensive reading may be obtained for a wide range of voltages.

D-C Measurements

In making d-c measurements, the usual voltmeter takes a certain amount of current from the circuit under test. This causes inaccurate readings when a high resistance circuit is tested because the additional current taken by the voltmeter causes an increased voltage drop across the high resistance. The result is a lower than normal reading on the voltmeter and poorer operation of the radio during the set analysis. The V.T.V.M. has such a high input resistance (voltages to be measured are connected to the input of the instrument) that very little current is taken by the instrument. This causes little effect on the circuit tested and permits accurate readings to be taken.

Another advantage of the V.T.V.M. is that measurement of a voltage beyond the range of the instrument will not damage the pointer or the movement of the instrument, because the tube that actuates the movement will not draw enough current to cause such damage.

The operation of the vacuum tube voltmeter depends upon the amplification property of a vacuum tube. The input of the instrument is connected to the grid circuit of the tube; a change in grid voltage will cause a larger change in plate current and this is indicated by a milliammeter. The tube is biased so that it operates on the straight portion of its characteristic curve. The meter is adjusted to read zero when no external voltage is applied to the grid. The plate current which flows is directly proportional to the d-c voltage applied to the grid. The milliammeter scale may thus be calibrated in volts.

When the input voltage is applied in steps of one volt increments it is possible to calibrate the entire scale. A reversing switch is sometimes placed in the circuit of the milliammeter so that even when the prods are reversed the pointer will still go forward. A zero center instrument also permits such reversal, although the scale is harder to read because it is cut in half and the graduations are finer.

A-C Measurements

If the tube is operated near one end of its characteristic curve, a-c voltages will actuate the milliammeter. Those voltages may be calibrated in either rms (root means square) or peak values of voltage.

The usual a-c voltmeter is not capable of taking accurate readings of r-f signal voltage (which is a-c) in a radio for the following reasons:

(1) The impedance of the voltmeter "loads" (absorbs power from) the r-f circuit tested causing reduced voltage.

(2) The capacity of the leads and voltmeter circuit "detune" (change the resonant frequency of) any tuned circuit tested.

(3) The capacity of the leads and voltmeter circuit by-passes a certain amount of signal voltage from untuned circuits preventing full signal voltage from reaching the meter.

(4) The rectifier associated with the voltmeter, or the voltmeter itself does not respond as readily to high frequencies as to lower frequencies.

The error of a-c instruments increases as frequency increases making them inaccurate for most r-f measurements at the higher frequencies.

R-F Measurements

The V.T.V.M. can be designed to make a-c measurements with but little error at all frequencies except the very highest (ultra-high). This is accomplished in the following manner:

A d-c V.T.V.M. circuit is used as the fundamental unit. See Fig. 1.

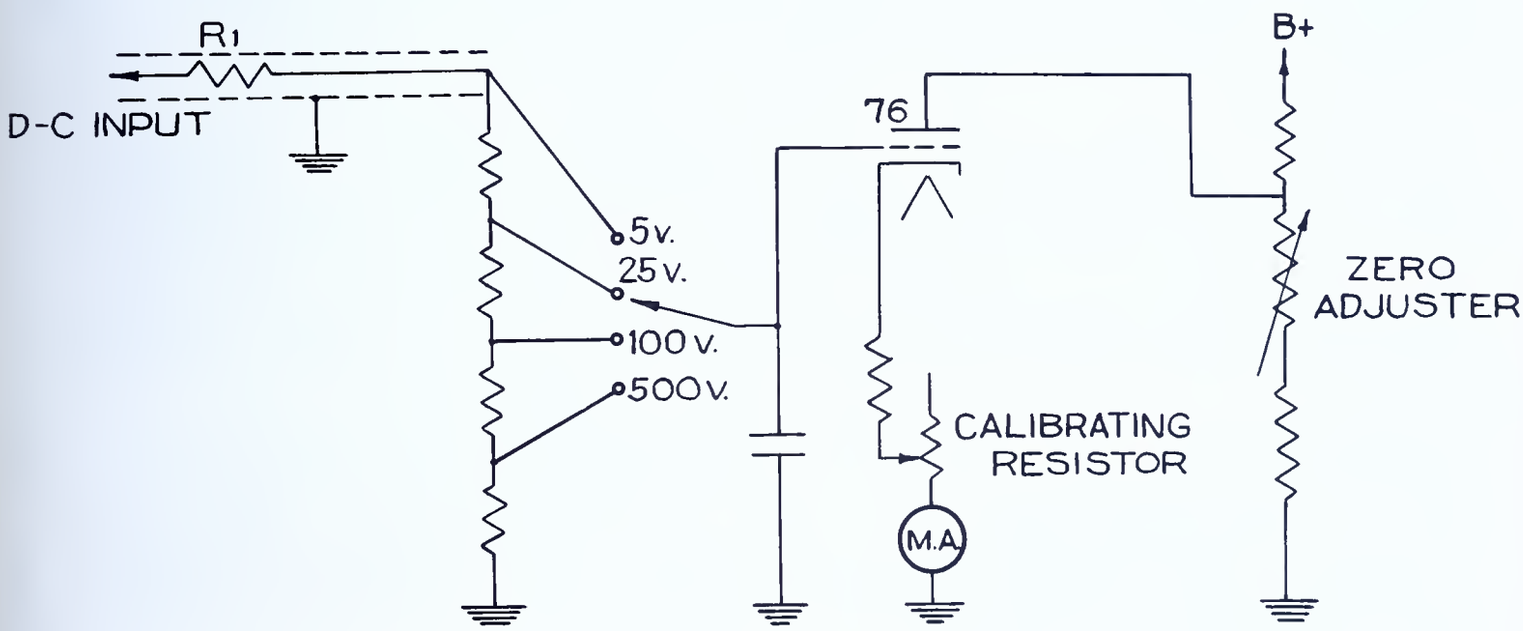

FIG.- 1

A flexible cable of a suitable number of conductors is connected to the instrument. The other end of the cable is connected to a small size vacuum tube (usually of the acorn type) which is used as a rectifier. See Fig. 2.

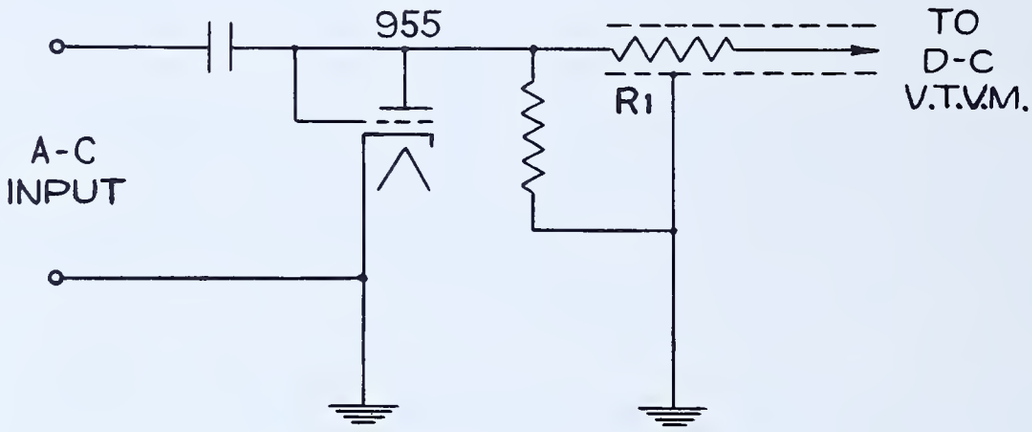

FIG.- 2

This type is chosen because of low input (grid to cathode) capacity. The end of the cable containing the tube is called a probe and in use the probe is connected directly to the circuit to be tested so the r-f signal is applied directly to the input of the rectifier tube. This signal is rectified by the tube from alternating to direct current and the direct current voltage is applied to the V.T.V.M. causing the indicator of the voltmeter to move. In this manner the capacity applied to the circuit being tested is very small and there is negligible loading of the circuit.

When high frequency r-f measurements are not necessary, the rectifier tube is sometimes located in the same housing as the d-c V.T.V.M. This converts it to an a-c instrument and the usual test leads are used in measuring. Sometimes the "hot" test lead is shielded and a 1 megohm resistor is located in the probe in place of the rectifier tube. This permits d-c measurements at the grids of r-f tubes to be made without affecting the associated r-f circuit, since the 1 megohm resistor isolates the circuit from the capacitive effect of the test leads, thereby reducing the effect of loading.

Any attempt to measure a-c power voltages where the value of potential is above the arc-over (peak inverse) voltage of the tube used as a rectifier will result in damage to the tube. This is the only precaution necessary when an acorn or other tube is used on the end of the test probe. If the probe has a high value resistor or a capacitor in it, this will not occur.

Types of V.T.V.M.

Commercially manufactured vacuum tube voltmeters include bridge and push-pull arrangements. When the bridge circuit is used, the plate resistance of the tube is one arm of the bridge. See Fig. 3.

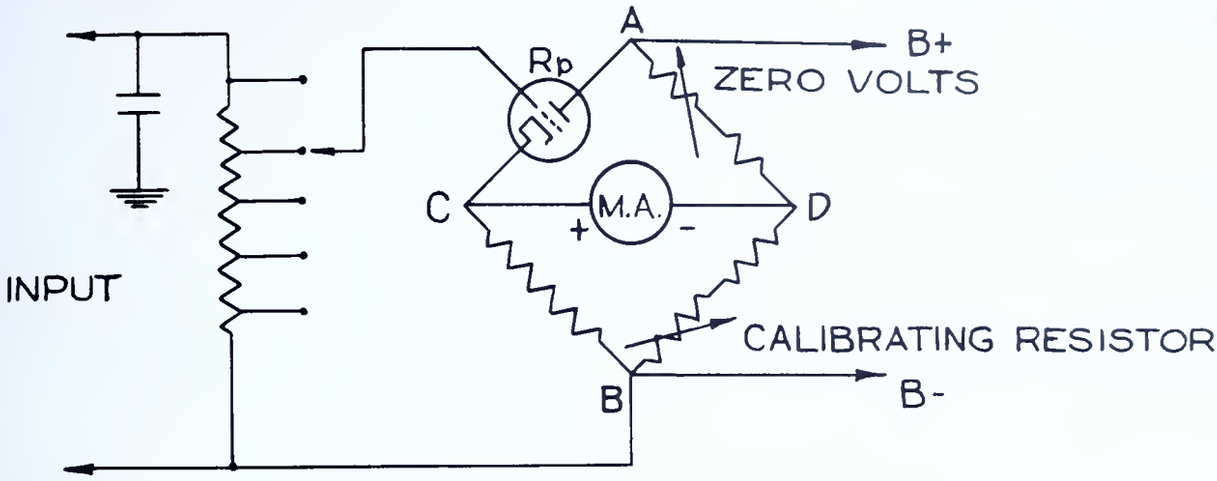

TYPICAL BRIDGE CIRCUIT FOR VACUUM TUBE VOLTMETER

FIG.- 3

An advantage of push-pull arrangement is that it allows the polarity of the test prods to be reversed and still retain the same calibration of the d-c instrument.

Some vacuum tube voltmeters use an electron ray (visual indicator or eye) tube as the indicating device instead of the milliammeter.

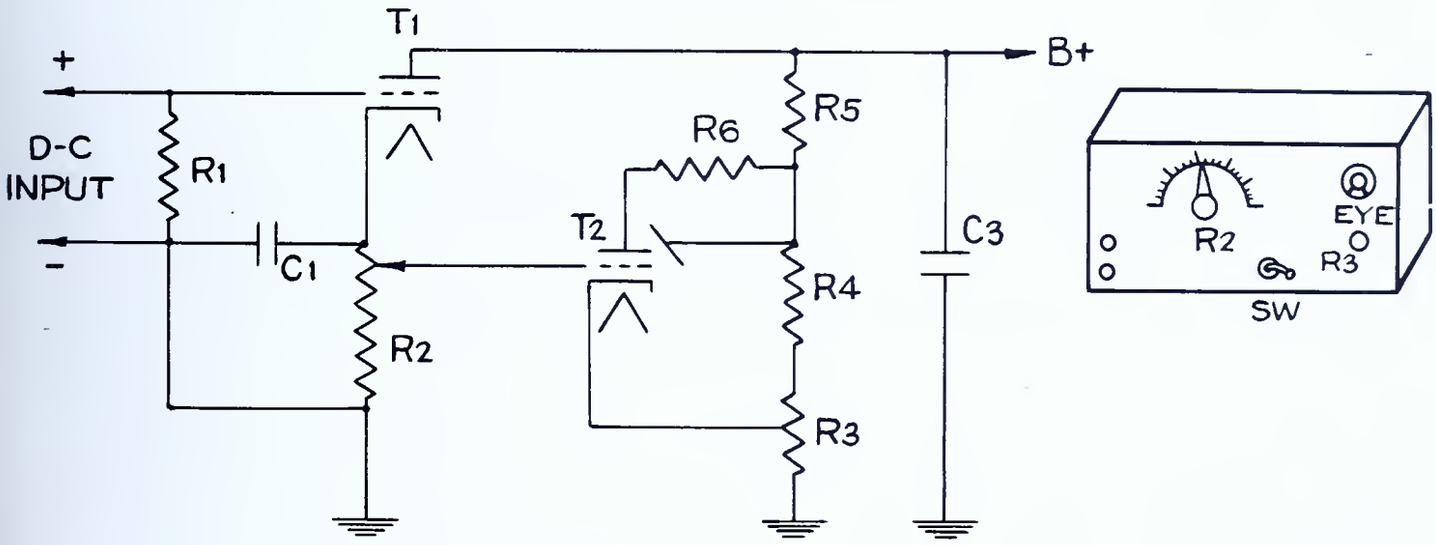

V.T.V.M. - USING AN ELECTRONIC
EYETUBE AS AN INDICATING DEVICE

FIG.-4

In Fig. 4 the current flowing through the bias resistor R_2 (connected as a potentiometer) makes available the voltage necessary to close the eye of a visual indicator tube (T_2) with no input voltage on the first tube (T_1). When a d-c voltage is applied to the grid of this tube (T_1), a change in current flow through the bias resistor will in turn cause the setting of the eye to change. By re-setting the potentiometer R_2, the original position of the eye may be restored. Thus, by applying a known d-c voltage in small steps to the instrument, and marking the settings of the potentiometer required to just close the eye, it is possible to calibrate a voltage scale.

Alternating current voltages may be measured by the use of a rectifier tube before the d-c input. See Fig. 2.

A. CALIBRATE A VACUUM TUBE VOLTMETER

General Information:

Specific instructions for the adjustment and calibration of a commercial V.T.V.M. are given in the instruction booklet that accompanies that unit. In using the instrument, a warming-up period is required so that the internal voltages may become stable. It is probable that the "zero adjuster" will need adjustment occasionally during the first few minutes after the unit has been turned on.

The instruments are very carefully adjusted at the factory and re-calibration is necessary only when a tube is replaced or the instrument has been abused. To calibrate a V.T.V.M. it is necessary either to have standard voltages available or to have an accurate voltmeter to use as a measurement standard. A suitable voltage source shunted with a potentiometer can be used for calibration by connecting the standard meter in parallel with the V.T.V.M. across one end of the potentiometer and the movable arm; then any voltage within the range of the source can be used as a standard. See Fig. 5.

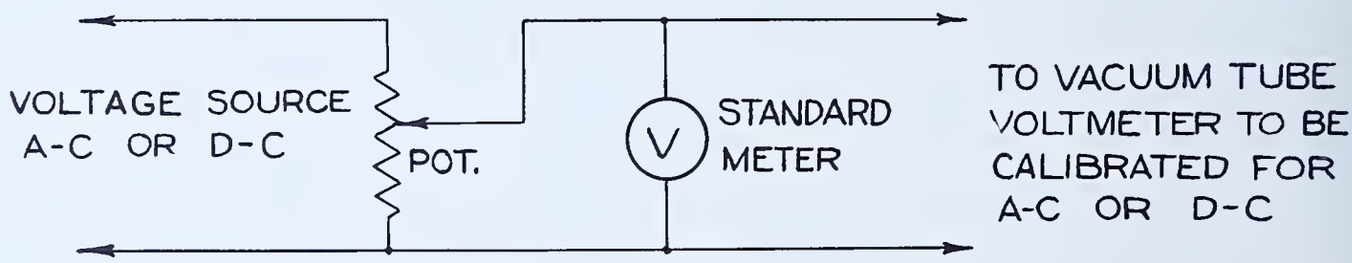

FIG.-5

Bias cells are sometimes incorporated in the range switch so that the instrument may be adjusted at the time the V.T.V.M. is turned on to read the voltage of the cell used for calibration (usually one volt).

Specifications:

Adjust the V.T.V.M. for proper calibration on d-c voltage.

Tools needed:

1. Screw driver
2. Aligning kit
3. Soldering iron
4. Long nose pliers
5. Diagonal cutting pliers

Equipment needed:

1. V.T.V.M., a-c and d-c
2. Multimeter, a-c and d-c
3. Signal generator, r-f and a-f
4. Speech amplifier with power supply (Job 5)
5. Superheterodyne, all-wave receiver
6. PM speaker

Materials needed:

1. Resistor, 50 ohm, 1 watt
2. Resistor, 10 ohm, 5 watt
3. I.F. transformer
4. 0.1 mfd. paper capacitor, 600v
5. Interstage a-f transformer
6. Output transformer
7. Bias cell, 1 volt
8. Test leads

The lists above provide the tools, equipment and materials required for the performance of all the jobs of this unit.

Procedure:

1. Connect V.T.V.M. to proper a-c outlet and turn on unit; allow 10 minutes for heating.

2. Study instruction book for V.T.V.M. to learn the proper method of calibration and location of calibration control.

   Note: It may be necessary to remove the instrument from the case to reach the adjustment of the calibration control.

3. Set V.T.V.M. to the lowest d-c range.

4. Use zero adjustment to set the pointer of the movement to zero.

5. Connect the bias cell to the d-c input of the V.T.V.M., observing polarity. Do not short the bias cell.

6. Set calibration adjustment so that the instrument reading is exactly one volt.

7. Remove connections between bias cell and V.T.V.M.

8. Set the pointer of the movement to zero again.

9. Connect bias cell to V.T.V.M. d-c input.

10. Adjust calibration control so that voltmeter reading is one volt.

11. Repeat Steps 7, 8, 9, and 10 until the meter reading is one volt with the bias cell connected, and zero with the connections between bias cell and V.T.V.M. removed.

12. Reassemble V.T.V.M. in its case.

B. MEASURE VOLTAGES WITH A V.T.V.M.

General Information:

This job and those following provide the typical uses of the V.T.V.M. The ability to use the meter, and knowledge of its applications are thus obtained.

Specifications:

Measure d-c voltages in high resistance circuits of the amplifier and compare readings taken with multimeter to those taken by the V.T.V.M.

Procedure:

1. Connect either the PM speaker or the 10 ohm 5 watt resistor to the secondary of the output transformer of the amplifier.

2. Connect the amplifier to the power supply and plug the power supply into a suitable a-c outlet.

3. Turn on the amplifier.

4. Connect the negative or common test lead from the multimeter to the chassis of the amplifier.

5. Place the test prod of the multimeter on the various socket connections of the tubes as listed in tabulation form 1.

   Caution: Be sure the scale of the multimeter is on the highest range of voltage for the initial test each time a reading is taken.

6. Tabulate the voltage readings on a copy of tabulation form 1.

7. Connect the V.T.V.M. to the a-c outlet and allow it to heat up for a few minutes.

8. Make zero adjustments as designated in V.T.V.M. instruction book.

9. Connect V.T.V.M. test leads so that the common connection goes to the chassis of the amplifier.

10. Measure voltages with the other test lead at the same points as in Step 5.

11. Tabulate these voltages on the copy of form 1.

12. Turn off amplifier.

C. CALCULATE GAIN-PER-STAGE IN AN AUDIO AMPLIFIER

General Information:

It is occasionally necessary to determine the voltage gain-per-stage of an audio amplifier. The gain in a stage of voltage amplification may be determined by measuring the input and output signal voltage and then calculating the ratio of the output signal voltage to the input signal voltage. The ratio thus determined is the gain of the stage. The input signal voltage must be the same while both measurements are being made. One method of supplying the signal voltage to the amplifier is shown in Fig. 6.

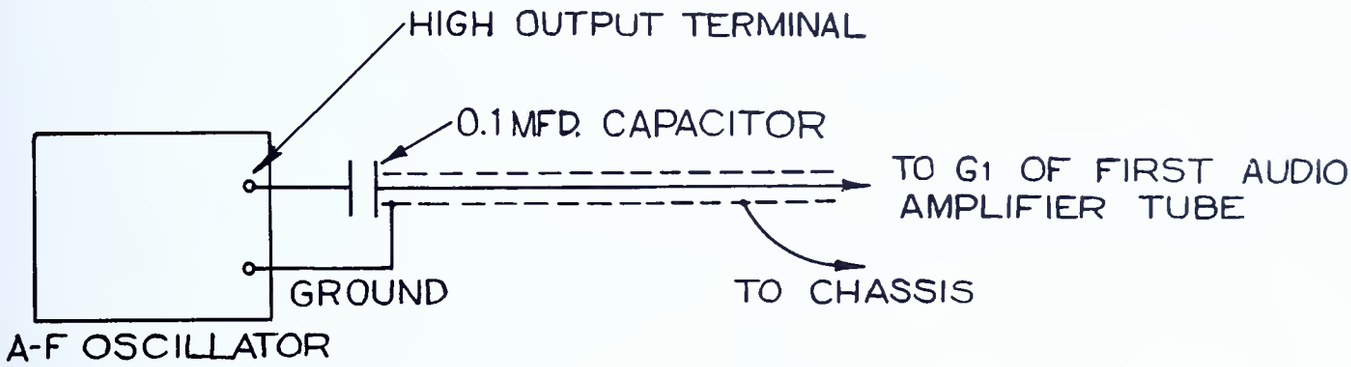

ISOLATING CAPACITOR CONNECTIONS

FIG.-6

Specifications:

Measure the gain of the 6SJ7 stage in the audio amplifier.

Procedure:

1. Connect a 0.1 mfd. 600v paper capacitor in series with the "hot" output connection of the a-f oscillator and the test lead as shown in Fig. 6.

2. Connect the a-f oscillator to suitable a-c outlet.

3. Turn on oscillator.

4. Set up V.T.V.M. to measure a-c volts.

5. Connect the output leads of the a-f oscillator so that the ground or shielding from the oscillator connects to the chassis of the amplifier.

6. Connect the "hot" lead from the a-f oscillator to the control grid of the first a-f tube (6SJ7).

7. Set range switch of the V.T.V.M. so that 1 volt will register near the upper end of the scale.

8. Connect one V.T.V.M. prod to the chassis and the other prod to the control grid of the first a-f tube.

9. Adjust the output attenuator of the a-f oscillator so that a 1 volt a-c reading is obtained.

10. Turn on the amplifier.

11. Measure the a-c (signal) voltage on the plate of this same tube by placing the V.T.V.M. "hot" lead in contact with the plate terminal of the 6SJ7 tube.

    Caution: Be sure the range switch is turned to a high voltage scale for the initial reading, then reduce to a lower range to obtain a more accurate reading.

12. Tabulate the reading obtained in Steps 9 and 11 in notebook on a copy of tabulation form 2.

13. Calculate the actual voltage gain of the tube, using the formula:

$$\text{Voltage Gain} = \frac{E \text{ output}}{E \text{ input}}$$

14. Compare this result with the amplification factor given in the tube manual. Losses within the circuit will cause the actual voltage gain to be less than that printed in the tube manual.

15. Turn off and disconnect all apparatus.

D. TEST AN I-F TRANSFORMER FOR OPERATING CONDITIONS

General Information:

Intermediate frequency transformers consist of two or more inductances coupled together. The secondary, and usually the primary, of the i-f transformer are tuned by either trimmer capacitors or movable plungers of powdered iron held together by a binder. When powdered iron core plungers are used, a fixed capacitor is sometimes shunted across each winding to provide the correct L-C ratio, thus giving stability and sharpness of tuning.

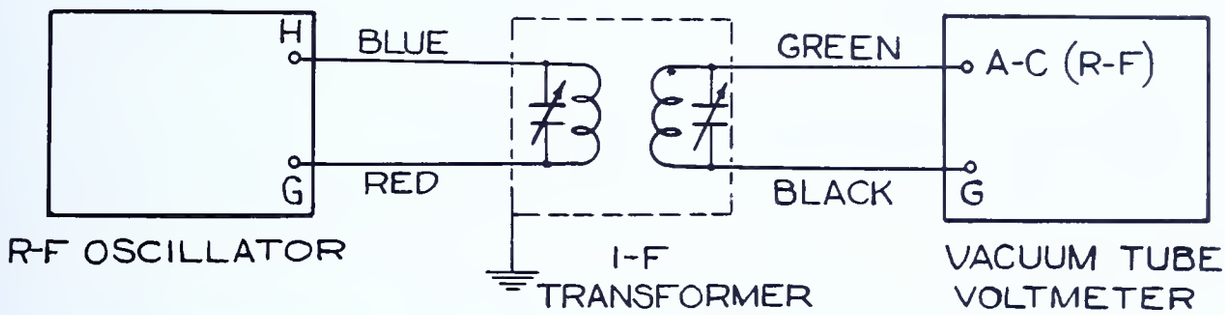

FIG.- 7

By testing an i-f transformer as indicated in Fig. 7, it is possible to determine:

(1) Resonant frequency range of the transformer.
(2) Transformer ratio (voltage gain).
(3) Whether or not the tuning capacitors short at some position of their adjustment.
(4) Some determination of the "Q" of each winding by noting the sharpness of the resonance curve.

Specifications:

Determine the operating condition of an i-f transformer.

Procedure:

1. Remove the i-f transformer carefully from its shield can, and visually inspect it for its mechanical condition (damaged windings, broken leads and capacitor insulation).

2. Check windings for continuity with ohmmeter.

3. Check trimmer capacitors for shorts.

4. Reassemble the i-f transformer in its shield.

5. Connect the i-f transformer between the r-f signal generator and the V.T.V.M. as shown in Fig. 7. Make certain the shield can is connected to the ground terminal of the signal generator.

6. Place r-f oscillator and V.T.V.M. in operation.

7. Set r-f oscillator controls as follows:

   a. Output attenuator advanced to full-on.
   b. Range switch and dial for frequency of the i-f transformer.
   c. Modulation to "off".

8. Set the trimmer capacitors near minimum capacity and tune the r-f oscillator through the frequency range of the transformer used until maximum reading is obtained on the V.T.V.M. Tabulate this frequency in notebook on a copy of form 3.

9. Leave the r-f oscillator set at this frequency. Adjust the trimmer capacitors slowly and carefully for a new maximum reading on the V.T.V.M.

   Note: Be certain each trimmer makes the signal go through a definite peak. Record the voltage reading on the copy of form 3.

10. Leave the attenuator of the r-f oscillator set at the same position as in Step 9. Place the V.T.V.M. prods on the output of the r-f oscillator and measure the voltage being fed into the primary of the i-f transformer. Record this voltage reading on the copy of form 3.

11. Calculate the voltage gain of the transformer from the formula:

$$\text{Voltage Gain} = \frac{\text{E (output from secondary of transformer)}}{\text{E (input to primary of transformer)}}$$

12. Turn the trimmer capacitors all the way in (maximum capacity) and repeat Steps 7, 8, 9, 10, and 11.

    Note: If the i-f transformer used has iron cores, perform the operations indicated in Steps 8, 9, 10, and 11 with the plungers nearly all the way out and Step 12 with plungers nearly all the way in.

13. Disconnect apparatus and return r-f oscillator to stock room.

E. TEST AN AUDIO TRANSFORMER FOR THE RATIO OF THE PRIMARY TO SECONDARY TURNS

General Information:

Audio transformers generally consist of two or more coils wound on a laminated iron core. There is a step-up or step-down ratio of transformation depending upon the number of turns on the windings. A step-up ratio results in a voltage gain from the transformer while a step-down ratio results in a reduced voltage from the unit.

It may be desirable to check the ratio of audio signal voltage resulting from the transformer action. The vacuum tube voltmeter may be used to determine the voltage gain by measuring the primary and secondary voltages present at the transformer terminals and computing the ratio of the output (secondary) to the input (primary) voltage. From these results the turns ratio may be calculated.

Specifications:

1. Test an output transformer for turns ratio.
2. Test an interstage transformer for turns ratio.

Procedure:

1. Draw a symbol of the universal output transformer in notebook.

2. Measure the d-c resistance of each winding of that transformer with the multimeter and mark these values on the drawing.

3. Connect the primary of the transformer to the 6.3 volt filament circuit of the power supply.

4. Turn on the power supply.

5. Measure the voltage across the primary of the output transformer with the V.T.V.M.

6. Measure the a-c voltages across the secondary of the output transformer. Use lowest range of V.T.V.M. Tabulate the voltage readings on the sketch in notebook.

7. Calculate the ratio of the primary to secondary turns as follows:

$$\frac{T_p}{T_s} = \frac{E_p}{E_s}$$

where $\frac{T_p}{T_s}$ = primary to secondary turns ratio
E_p = primary a-c volts
E_s = secondary a-c volts

8. Repeat the entire process with an audio interstage transformer.

9. Turn off power supply and V.T.V.M.

F. TEST THE IMPEDANCE OF AN OUTPUT TRANSFORMER

General Information:

If an output transformer of improper impedance is used on a radio, serious distortion in the tone may result. The procedure in this job may be used to determine the impedance of an output transformer.

Specifications:

Measure the output tube plate load impedance of the superheterodyne receiver.

Procedure:

1. Connect the all-wave receiver to a suitable a-c line and turn on.

2. Connect the apparatus as shown in Fig. 8.

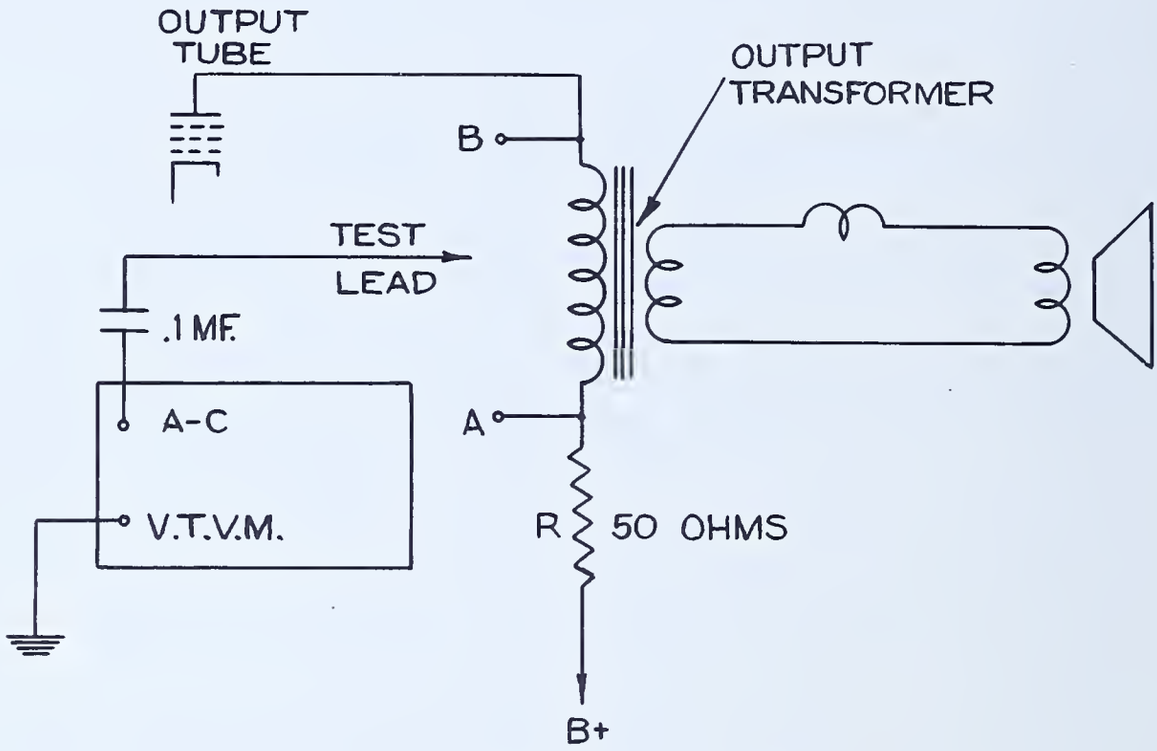

FIG.- 8

3. Connect the output of the a-f oscillator to the input of the audio amplifier of the receiver.

4. Turn on a-f oscillator and adjust for 400 cycles output.

5. Adjust receiver volume control for a signal of moderate strength.

6. Measure the a-c signal voltage across the small known value resistor R (approximately 50 ohms) by connecting the "hot" test lead to testing point A and the ground lead to the chassis (see Fig. 8). Record voltage on copy of form 4.

7. Calculate the a-c signal current by Ohm's Law:

$$I = \frac{E}{R}$$

where I = the a-c signal current in amperes
E = the a-c signal voltage measured by the V.T.V.M.
R = the known value of resistance in ohms

Record on copy of form 4.

8. Measure the a-c signal voltage across the load on the tube by connecting the test lead to the plate of the output tube (test point B). Record voltage on copy of form 4.

9. Calculate the plate load impedance from Ohm's law for a-c circuits.

$$Z = \frac{E}{I}$$

where Z = the plate load impedance in ohms
E = the a-c signal voltage measured in Step 7
I = the a-c signal current in amperes (found in Step 7)

10. Record value of Z on copy of form 4.

11. Turn off all apparatus.

G. MEASURE OSCILLATOR GRID VOLTAGE.

General Information:

The working condition of an oscillator and the amplitude of the a-c voltage generated by it are very important factors in the operation of a superheterodyne receiver. When the oscillator is not in good working condition, the a-c signal voltage developed by it will vary considerably at different positions on the tuning range of the radio receiver. The mixing of this generated voltage with the incoming signal in the mixer tube produces a third signal at the intermediate frequency of the receiver. The amplitude of i-f signal voltage will depend considerably upon the amplitude of the voltage generated by the oscillator; therefore, weak or erratic operation of the oscillator will be detrimental to the operation of the radio.

The bias voltage developed by the oscillator is controlled by the circuit constants and the condition of the oscillator tube. The bias voltage of an oscillator is obtained by a different method than that of an amplifier tube. When the tube is self-biased, as in an amplifier, the voltage drop across the bias resistor is the product of the current drawn by the tube and the resistance of the bias resistor. In an oscillator, the grid leak and grid capacitor automatically self-bias the tube. The voltage developed on the grid of the tube during oscillation is rectified on the positive half of the cycle. The grid leak provides a d-c path for current flow. When the grid capacitor and grid leak are of the proper value, a rectified voltage will be maintained across the grid leak, thus biasing the tube. If a milliammeter (0-1 ma.) is connected in series with the grid leak, the current indicated, multiplied by the resistance of the grid leak in ohms, will be the bias voltage. However, this method of determining grid bias is not desirable as it requires that the circuit be opened in order to take a reading with the milliammeter. Neither will a regular voltmeter be practical, because it will draw excessive current, disturb the operation of the circuit, and give an erroneous reading.

The isolating resistor in the V.T.V.M. test probe permits measurement of oscillator bias voltage to be made without disturbing the operation of the oscillator circuit.

The d-c oscillator grid voltage will vary with: (1) the frequency range of the circuits, (2) the condition of the tube. (3) the value of grid leak and grid capacitor, (4) the amount of the feedback, and (5) the d-c voltage on the plate of the oscillator tube.

Specifications:

Measure the grid bias voltage of the oscillator in the superheterodyne receiver for each of the following dial positions in each range of frequencies covered:

1. High frequency position
2. Center position
3. Low frequency position

Procedure:

1. Connect an all-wave receiver which is in good working condition to a 105-125 a-c line and turn it on.

2. Connect and turn on the V.T.V.M. and set it for d-c voltage readings on the 50v scale.

3. Clip the common or negative connection of the V.T.V.M. to the chassis of the radio.

4. Connect the "hot" probe of the V.T.V.M. to the control grid of oscillator tube.

5. Record, on copy of form 5, the measured voltage for the high, middle, and low frequency settings of the dial.

   Note: If more than one frequency range is provided, repeat for each range.

6. Turn off the receiver and the V.T.V.M.

7. Remove the "hot" test lead from the control grid of the oscillator tube.

8. Remove connections between V.T.V.M. and the receiver.

ADDITIONAL USES OF THE VACUUM TUBE VOLTMETER

1. MEASURING GAIN IN R-F OR I-F AMPLIFIERS

In testing a radio, gain-per-stage measurements are of value in r-f and i-f stages as well as in audio amplifiers. They tell exactly how much the signal voltage is being amplified by each tube and its associated circuit. To make such measurements, an r-f oscillator with a high output and a good attenuator should be used. The oscillator is connected to the antenna and ground of the radio to be tested, and any AVC action rendered inoperative. Gain-per-stage is measured and calculated in similar fashion to the audio gain test performed in Part C in this job.

2. CHECKING FREQUENCY RESPONSE OF A-F AMPLIFIERS

The V.T.V.M. may be used instead of the cathode ray oscillograph which was used in Job 6 for determining the frequency response of an a-f amplifier.

3. CHECKING BY-PASS ACTION

The effectiveness of by-pass capacitors may be determined at a-f or r-f frequencies by measuring the a-c component across them with a V.T.V.M. A low a-c component indicates good by-passing action.

4. CHECKING SMALL CAPACITORS

In the absence of other test equipment, small capacitors may be checked by connecting the V.T.V.M. and the capacitor in series across a d-c source. Observation of the charging current (initial voltage surge) will show capacity. If the voltage across the V.T.V.M. falls off to zero after charging the capacitor, the capacitor is not leaky and may be considered good.

5. MEASURING PER CENT MODULATION

Per cent modulation is usually measured with the oscillograph. It can also be determined by the use of the V.T.V.M., but such an instrument should be one designed to indicate peak a-c voltages since peak readings are used in the formula below.

To determine per cent modulation, measure the amplitude of a carrier when it is modulated and then again when it is not.

$$\text{Per cent modulation} = 100 \times \frac{E_1 - E_2}{E}$$

where E_1 = modulated signal voltage

E_2 = unmodulated signal voltage

QUESTIONS

Place the answers to these questions in your notebook or on form as directed by instructor.

1. What are the main advantages of the V.T.V.M. over the moving coil instrument?
2. What is meant by the "detuning" effect?
3. A 1000 ohm-per-volt d-c voltmeter reads 200v d-c on the 250v range when placed on a point fed through a 500,000 ohm resistor. What is the potential drop in the resistor due to the current drawn by the voltmeter? What would be the reading obtained at the same point by a V.T.V.M. of infinite input resistance?
4. When comparing readings taken between the chassis and various tube contacts of the amplifier with the multimeter and the V.T.V.M., why do some voltage readings correspond and some not correspond?
5. How is the voltage ratio of an audio transformer determined with the V.T.V.M.?
6. Explain the self-bias action of an oscillator.
7. How could a leaky by-pass capacitor be checked with a V.T.V.M.?
8. How may a d-c V.T.V.M. be converted to read a-c voltages?
9. What device might be used instead of the milliammeter in a V.T.V.M.?
10. When should a V.T.V.M. be re-calibrated?
11. Explain how calibration of a V.T.V.M. is accomplished.
12. What is the purpose of the "zero adjuster"? What condition necessitates the use of it?
13. What formula is used to determine the voltage gain in an audio amplifier?
14. Explain how a test might be made to determine the voltage gain of an audio amplifier.
15. The input signal voltage to a tube is .06 volts when measured by a V.T.V.M. The output signal voltage of the same tube is 2.75 volts when measured in the same manner. What is the voltage gain of the tube?
16. Was a-f or r-f used in checking an i-f transformer?
17. Was the a-c or d-c range of the V.T.V.M. used in checking the i-f transformer?
18. Did the output transformer checked in this job have a step-up or step-down ratio? The interstage transformer? How was this determined?
19. Why was a-c voltage used in checking: (a) the output transformer, (b) the interstage transformer? What was the frequency used?
20. Explain the procedure used to find the plate load impedance of the audio output tube.
21. What formula was used to calculate plate load impedance?
22. Why should the usual moving coil instrument not be used to measure the r-f oscillator grid voltage?
23. What type of probe is used in conjunction with the V.T.V.M. to measure oscillator grid voltage?
24. What is the advantage of using this probe?
25. How may oscillator grid voltage be measured by means of an 0-1 ma. milliammeter?
26. Why is this method not generally used?

References:

Everitt, W. L. et al., Fundamentals of Radio.
pp. 210-212.
Henney, K., Principles of Radio (Fourth Edition),
pp. 377-380.
The Radio Amateur's Handbook (Any Edition), A. R. R. L.,
Chapter on Measurements and Measuring Equipment.
The Radio Handbook (Any Edition), Editors and Engineers,
Chapter on Test and Measuring Equipment.

TABULATION FORMS

Form 1 — Part B

Tubes	Points Measured	D-C Voltage Multimeter	D-C Voltage V.T.V.M.
6SJ7	Cathode Control Grid Screen Plate		
6N7 (mixer)	Cathode Grid #1 Grid #2 Plate #1 Plate #2		
6C5 (driver)	Cathode Grid Plate		
6N7 (output)	Cathode Grid #1 Grid #2 Plate #1 Plate #2		

Form 3 — Part D

Steps	Output Volts	Input Volts	Frequency
8			
9			
10			
12 (8)			
12 (9)			
12 (10)			

Form 4 — Part F

Steps	A-C Volts	A-C Current	(Z) Impedance
5			
6			
7			

Form 2 — Part C

Signals Measured	Volts AC	Gain
Input Signal		
Output Signal		

Form 5 — Part G

Bands	Frequency Range	Volts (D-C)		
		High Frequency End	Center	Low Frequency End
1				
2				
3				

UNIT 11

THE SUPERHETERODYNE RECEIVER

JOB SHEET 11 — CONSTRUCT A SUPERHETERODYNE RECEIVER. Page 214

CONSTRUCT A SUPERHETERODYNE RECEIVER

General Information:

The superheterodyne receiving system differs from the tuned radio frequency receiver chiefly in the fact that in the superheterodyne the incoming carrier wave is converted to a frequency different from the carrier frequency prior to detection (demodulation). The outstanding advantages of the use of this system are:

(1) A higher degree of selectivity than is possible with the tuned radio frequency receiver employing a similar number of tubes.
(2) More uniform selectivity in operation over the entire range of frequencies covered.
(3) A higher degree of stability in operation over the entire range of frequencies than is possible with the tuned radio frequency receiver.
(4) A higher order of sensitivity for a given number of tubes.
(5) More uniform amplification throughout the range of frequencies covered.
(6) Fewer variable tuned circuits.
(7) Circuit is more easily adapted for multi-band operation.

Although the receiver constructed in this job employs a conventional superheterodyne circuit, separate tuning capacitors are specified to tune the oscillator and mixer circuits. This is not customary; a two gang capacitor usually being employed in order to secure single control tuning. However, such design necessitates very accurately constructed mixer and oscillator coils as well as the correct value of capacitors in these circuits. By using separate tuning capacitors compensation is possible for these critical factors since each tuned circuit may be adjusted individually. Therefore, in the construction of this receiver, separate tuning capacitors are recommended. If they are not available, a two gang capacitor with trimmers may be used, mounted in the position of C_1 (See Fig. 1).

This receiver employs a 6A8 dual purpose tube as a mixer and oscillator; a 6K7 tube is used as the intermediate amplifier; a 6Q7 functions as a demodulator, AVC tube, and first audio amplifier; and the 6F6 tube is the power amplifier in the audio section. No r-f amplifier is employed in the receiver; an intermediate frequency of 465 kc. is used to minimize image frequency interference. Although a lower i-f would give greater amplification, stability, and adjacent channel selectivity, serious image frequency interference would result from its use.

Specifications:

1. Assemble and wire a superheterodyne receiver in accordance with the chassis layout (Fig. 1) and the schematic diagram (Fig. 3).

2. Wind mixer coil (L_1-L_2) and oscillator coil (L_3-L_4) according to data given in Fig. 2.

3. Make a resistance check on the receiver.

4. Make a voltage check on the receiver.

5. Operate the receiver to tune in as many stations as possible.

Construction Suggestions:

To secure maximum performance and stable operation of a superheterodyne receiver, observe the following construction details:

1. Place r-f by-pass capacitors as close to the source of r-f voltage as possible.
   This permits short leads to be made so that stray r-f fields about these leads will not feed back into other circuits and cause oscillation.
2. Connect the outside foil lead of the by-pass capacitor to ground.
   This shields the capacitor preventing the radiation of stray r-f fields.
3. Mount parts so that grid and plate wires are as short as possible.
   If these leads are long, they will radiate or pick up r-f currents, causing oscillation. If it is impossible to mount the parts to make these leads short, they should be dressed (placed) as close to the chassis as possible or shielded.
4. Keep the grid and plate leads as far apart as possible.
   This prevents signals from the output (plate) being fed back to the input (grid) which may cause oscillation.
5. Keep the output circuits as remote as possible from the input.
   This prevents oscillation.
6. Make ground connections for any one stage to a common point.
   This prevents r-f currents of different stages from circulating through the common chassis circuit which might cause oscillation.
7. Twist heater filament wires to reduce the a-c field about those wires.
   This may prevent hum voltages from being induced into other wiring.
   When one heater lead is grounded, the other lead must be kept as far as possible from grid and plate leads to prevent their picking up hum voltages.
8. Shield grid leads in the input of the audio system to prevent hum pickup.
9. Shield all coils and tubes where necessary to prevent oscillation.
   This restricts the r-f fields so they do not feed back to other circuits.

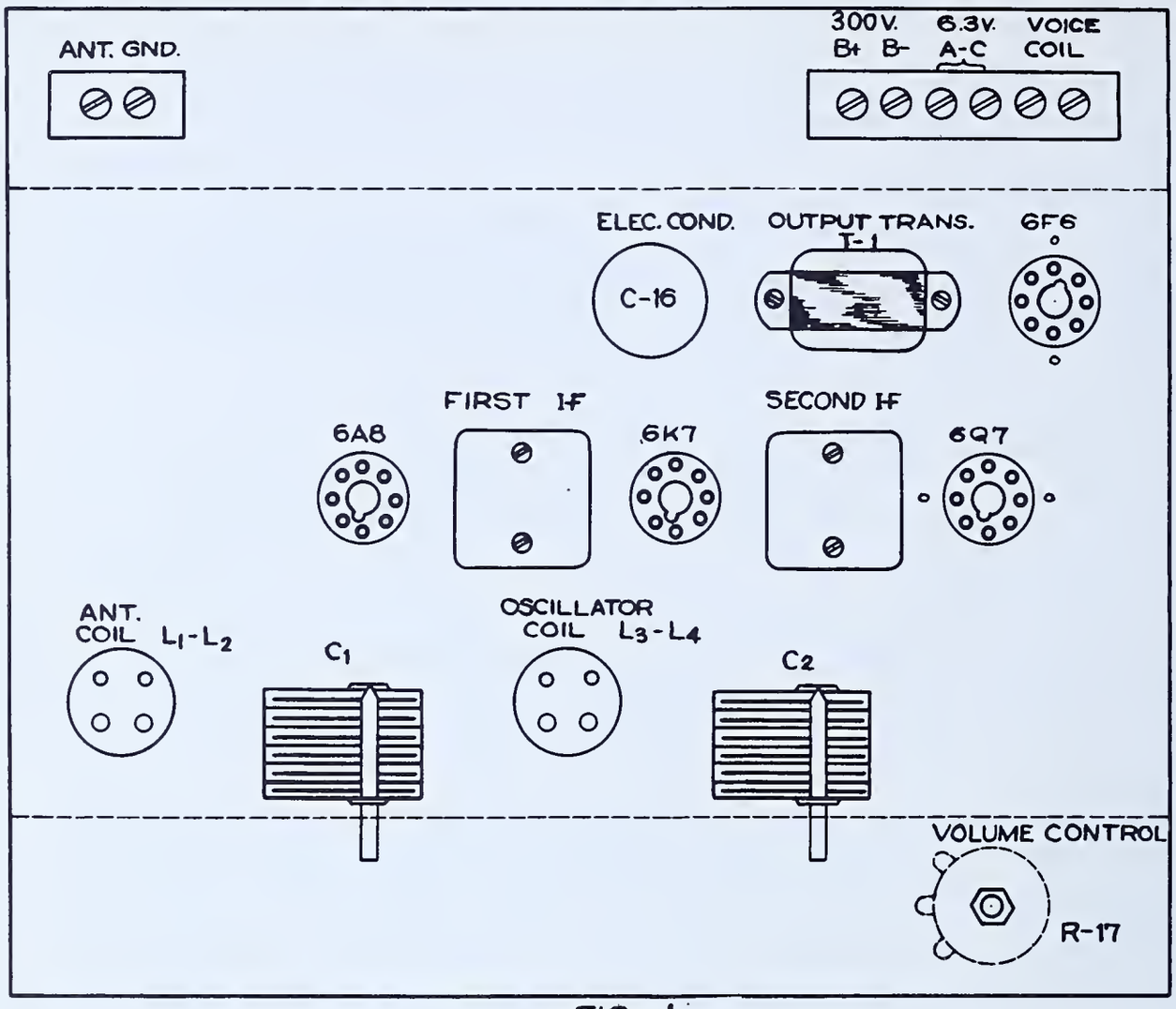
ANT. GND.
300V. B+ B-
6.3V. A-C
VOICE COIL
ELEC. COND.
C-16
OUTPUT TRANS. T-1
6F6
FIRST I-F
SECOND I-F
6A8
6K7
6Q7
ANT. COIL L1-L2
C1
OSCILLATOR COIL L3-L4
C2
VOLUME CONTROL
R-17

FIG.- 1

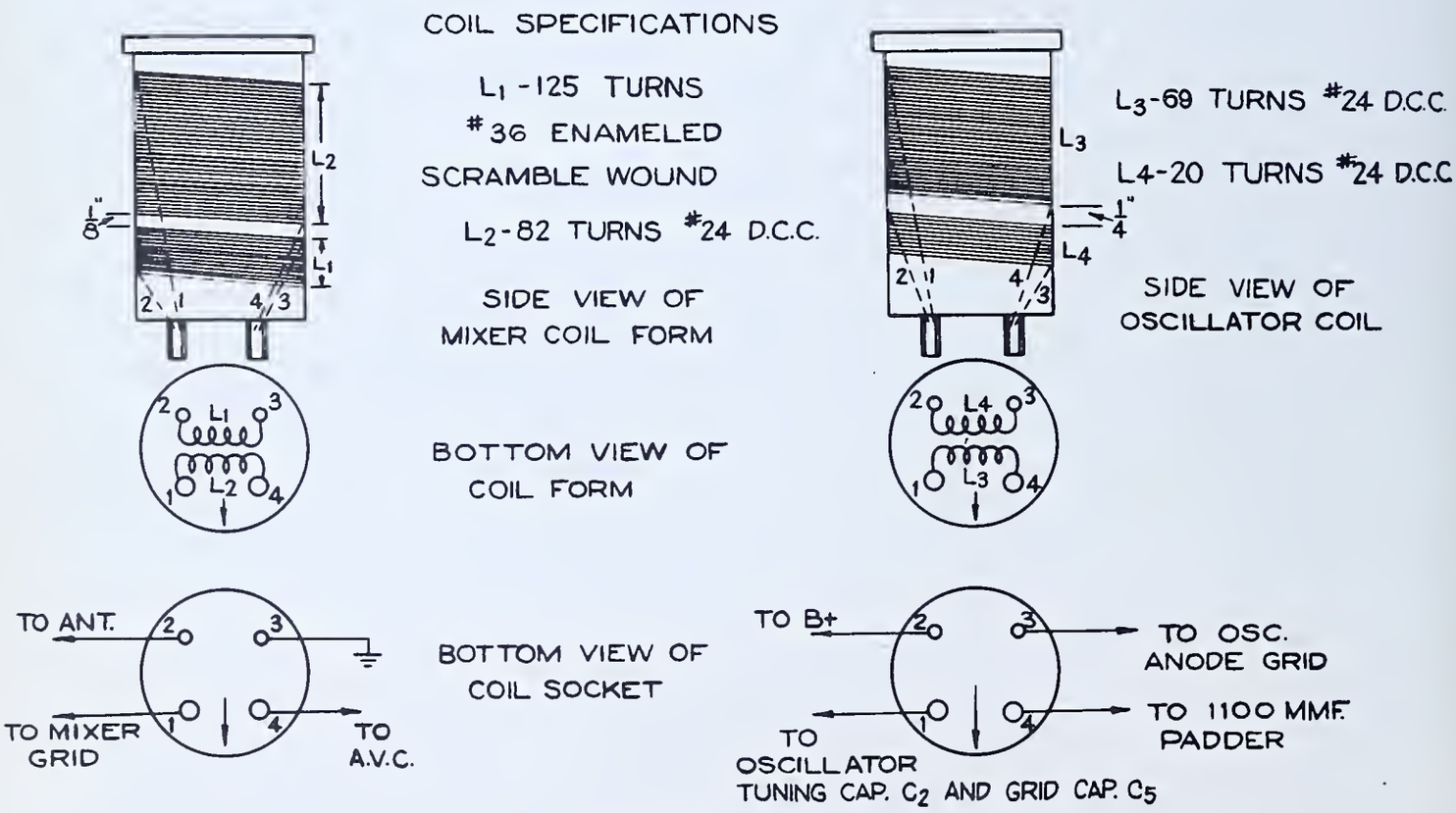
COIL SPECIFICATIONS
L1 -125 TURNS
#36 ENAMELED
SCRAMBLE WOUND
L2-82 TURNS #24 D.C.C.
L2
L1
1/8"
SIDE VIEW OF MIXER COIL FORM
L3-69 TURNS #24 D.C.C.
L4-20 TURNS #24 D.C.C.
L3
L4
1/4"
SIDE VIEW OF OSCILLATOR COIL
BOTTOM VIEW OF COIL FORM
TO ANT.
TO MIXER GRID
TO A.V.C.
BOTTOM VIEW OF COIL SOCKET
TO B+
TO OSC. ANODE GRID
TO 1100 MMF. PADDER
TO OSCILLATOR TUNING CAP. C2 AND GRID CAP. C5

FIG.- 2

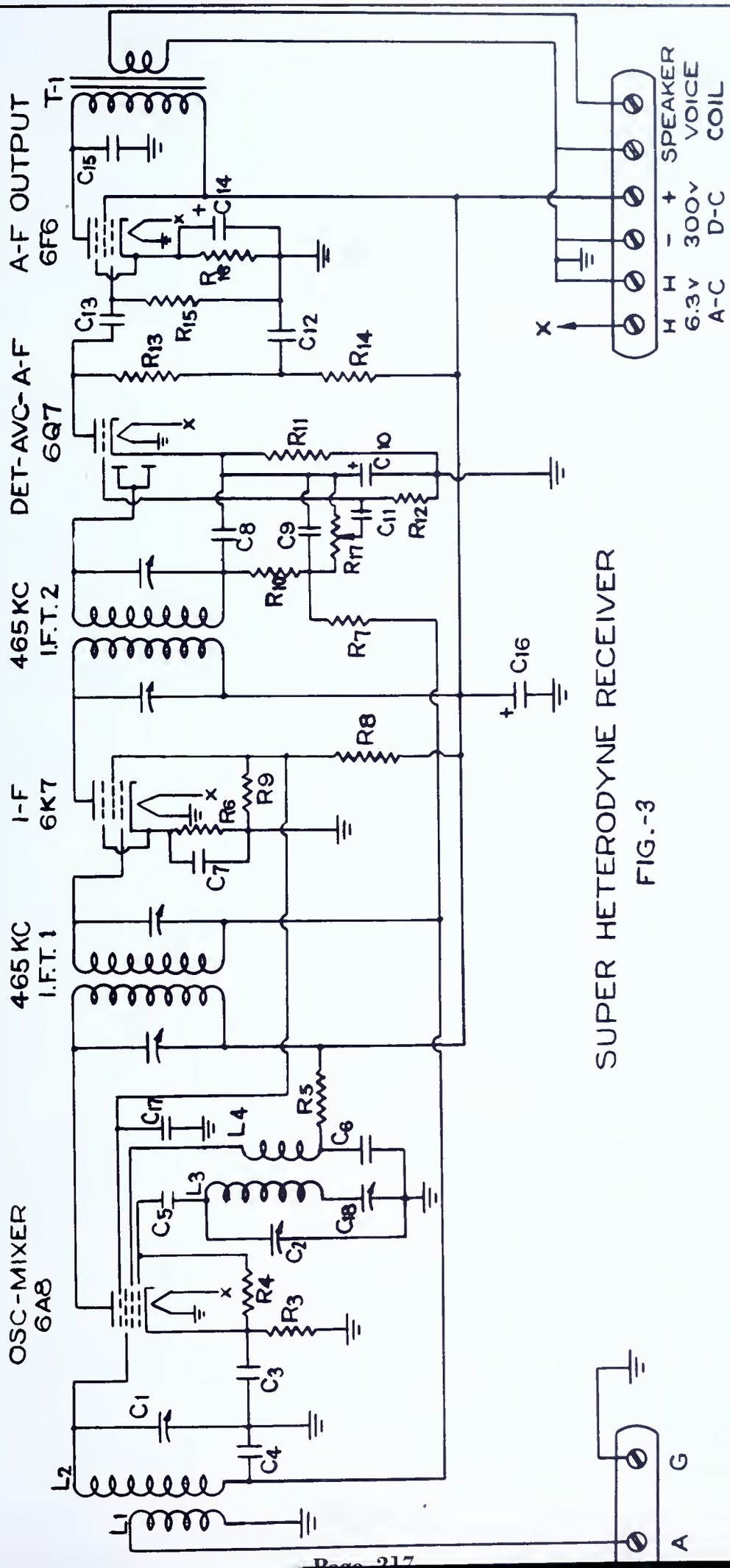

SUPER HETERODYNE RECEIVER
FIG.-3

Tools needed:

1. Soldering equipment
2. Long nose pliers
3. Diagonal cutting pliers
4. Screw driver
5. Assorted socket wrenches
6. Tools for chassis fabrication, if necessary

Equipment needed:

1. Multimeter (Ohmmeter)
2. Test leads
3. Power supply
4. 1- 6A8 vacuum tube
5. 1- 6K7 vacuum tube
6. 1- 6Q7 vacuum tube
7. 1- 6F6 vacuum tube
8. Test oscillator
9. PM speaker

Materials needed:

1. 2- Coil forms, 1½" diam., 4 prong
2. 2- IFT_1-IFT_2, i-f transformers, 465 kc.
3. 1- T_1, Output transformer (7000Ω to voice coil)
4. 4- Octal sockets
5. 2- 4 prong sockets
6. 1- 2 point screw type terminal strip
7. 1- 6 point screw type terminal strip
8. 1- R_3, 250 ohm, ½w carbon resistor
9. 1- R_4, 50,000 ohm, ½w carbon resistor
10. 1- R_5, 25,000 ohm, 1w carbon resistor
11. 1- R_6, 300 ohm, 1w carbon resistor
12. 1- R_7, 1 megohm, ½w carbon resistor
13. 1- R_8, 25,000 ohm, 1w carbon resistor
14. 1- R_9, 33,000 ohm, 1w carbon resistor
15. 1- R_{10}, 50,000 ohm, 1w carbon resistor
16. 1- R_{11}, 3,000 ohm, 1w carbon resistor
17. 1- R_{12}, 500,000 ohm, ½w carbon resistor
18. 1- R_{13}, 100,000 ohm, ½w carbon resistor
19. 1- R_{14}, 50,000 ohm, ½w carbon resistor
20. 1- R_{15}, 1 megohm, ½w carbon resistor
21. 1- R_{16}, 500 ohm, 1w carbon resistor
22. 1- R_{17}, 500,000 ohm potentiometer
23. 2- C_1, C_2, 365 mmf. variable capacitors
24. 1- C_3, .05 mfd. paper capacitor, 400v
25. 1- C_4, .05 mfd. paper capacitor, 400v
26. 1- C_5, .001 mfd. mica capacitor
27. 1- C_6, .05 mfd. paper capacitor, 400v
28. 1- C_7, .05 mfd. paper capacitor, 400v
29. 1- C_8, .0001 mfd. mica capacitor
30. 1- C_9, .0001 mfd. mica capacitor
31. 1- C_{10}, 10 mfd. electrolytic capacitor 25v
32. 1- C_{11}, .01 mfd. paper capacitor, 400v
33. 1- C_{12}, .25 mfd. paper capacitor, 400
34. 1- C_{13}, .01 mfd. paper capacitor, 400v
35. 1- C_{14}, 20 mfd. electrolytic capacitor, 50v
36. 1- C_{15}, .004 mfd. paper capacitor, 400v
37. 1- C_{16}, 8 mfd. electrolytic capacitor, 450v
38. 1- C_{17}, .05 mfd. paper capacitor, 400v
39. 1- C_{18}, padder capacitor, 1,100 mmfd. maximum
40. #24 and #36 D.C.C. B&S wire
41. 1- 7" x 13" x 2" chassis
42. 2- 3" dials
43. 1- Volume control knob
44. Hook-up wire
45. Solder
46. Hardware and tie points as needed

Procedures:

A. Assembly

1. Check the values of the parts against specified values.

2. Replace any defective parts with good ones.

3. Make a wiring diagram showing position of resistors, capacitors, tie points, and connecting wires.

4. Lay out chassis according to specifications. Fig. 1. If a prefabricated chassis is available, use it.

5. Drill and cut all necessary mounting holes.

6. Mount all major parts and terminal strips. See Fig. 1.

B. Wiring

1. Wire according to schematic, Fig. 3.

2. Check wiring visually against wiring diagram paying particular attention to lead dress.

3. Wind mixer and oscillator coils according to specifications. See Fig. 2.

4. Check coils for continuity.

5. Place coils in the proper sockets.

6. Make a point to point resistance check for short circuits.

7. Correct any short circuits or errors in resistance values which may exist.

8. Present completed receiver to instructor for inspection.

C. Operation

1. Connect the power supply to the receiver to secure the necessary voltages.

2. Insert tubes in proper sockets of receiver.

3. Connect power supply cord to proper a-c outlet and turn it on.

4. Check voltages at plates and grids of tubes. If no plate or screen grid voltages are obtained, turn off power supply and check power supply and receiver for short circuits, open circuits, or incorrect resistance values.

5. Connect a PM speaker to the output of the receiver.

6. Secure help of instructor in aligning the circuits of the receiver and in getting the receiver to operate.

7. Connect an antenna and ground to the proper receiver terminals.

8. Set the oscillator tuning capacitor so that a station is received. (The volume control must be slightly advanced for this operation).

9. Adjust the mixer tuning capacitor until the signal is at maximum strength and clarity.

10. Tune in as many more stations as possible, repeating Steps 8 and 9 for each station. Notice if whistles ("birdies") are heard as stations are tuned in. These "birdies" are caused by signals other than the desired i-f signal reaching the i-f channel.

11. Tune in a station on the receiver that results in a whistle in addition to the station.

12. Disconnect the antenna connection from the receiver and place finger on the antenna post. This gives the effect of a very short antenna.

13. Notice if the intensity of the whistle is reduced in proportion to the intensity of the station. This may result because the antenna circuit tunes sharper with a shorter antenna. Better results will be obtained with a shorter antenna in this case.

14. Re-connect the antenna to the receiver.

15. Vary the setting of the mixer tuning capacitor. Notice the effect on the whistle when the capacitor is set for resonance (perfect tuning) at the station frequency and when it is not set at the station frequency resonance.

16. Turn off receiver and keep for the following jobs.

QUESTIONS

Place the answers to these questions in your notebook or on form as directed by instructor.

1. What are the principle differences between the tuned r-f and superheterodyne receiver systems?
2. What frequencies are passed by the tuned r-f circuits?
3. What determines the selectivity of a tuned r-f circuit?
4. Explain two common methods of injecting the oscillator voltage.
5. What are image frequencies? How may they be prevented?
6. Of what purpose is the local oscillator in a superheterodyne receiving system?
7. Why would it be advisable to provide a tuned r-f stage ahead of the mixer stage?
8. If the carrier frequency of the received signal is 710 kc. and the local oscillator is operated at 1165 kc. what are the possible frequencies to which the i-f amplifier could be tuned?
9. Why is fixed tuning of the i-f amplifier possible?
10. What is meant by frequency conversion?
11. Show by schematic diagrams a separate oscillator-mixer and a combined oscillator-mixer (converter) circuit.
12. How much r-f voltage should the oscillator supply to the mixer circuit?
13. Explain how the desired intermediate frequency is selected from those present in the plate circuit of the mixer.
14. What are the essential differences between the i-f amplifier and the conventional tuned r-f stage?
15. What is demodulation?
16. What type of tubes may be used in the following stages of a superheterodyne?
    a. Tuned r-f stages
    b. Mixer-oscillator
    c. Combination mixer-oscillator (converter)
    d. Intermediate frequency amplifier
    e. Demodulator (second detector)
    f. Audio amplifier
17. How are the direct current and audio components of the demodulator output separated?
18. What is automatic volume control?
19. How is the automatic volume control voltage developed?
20. What governs the tunable range of frequencies in a superheterodyne system?
21. What are the advantages and disadvantages of the diode type detector?
22. What precautions are important regarding the wiring of by-pass capacitors?
23. What precautions are important regarding lead dress?

References:

Everitt, W. L. et al., Fundamentals of Radio, pp. 315-326.
Henney, K., Principles of Radio (Fourth Edition), pp. 386-400.
The Radio Amateur's Handbook (Any Edition), A. R. R. L.,
Chapters on Reception of Radio Signals and Construction of Receivers.
The Radio Handbook (Any Edition), Editors and Engineers,
Chapters on Radio Receiver Theory and Radio Receiver Construction.

UNIT 12

THE R-F OSCILLATOR

Reference AA — The R-F Oscillator. Page 224

Reference BB — Trimmer and Padder Capacitors. Page 227

Reference CC — The Output Meter. Page 228

JOB SHEET 12 — USE THE R-F OSCILLATOR FOR RECEIVER ALIGNMENT. Page 230

I. Align a T-R-F Receiver. Page 231

II. Align a Superheterodyne Receiver. Page 232

A. Align I-F Amplifier Trimmers. Page 232

B. Align R-F, Mixer, and Oscillator Trimmers. Page 234

C. Align an All-Wave Receiver. Page 236

THE R-F OSCILLATOR

General Information:

An r-f test oscillator is an instrument which generates radio frequency signals and is often called a signal generator. It can provide r-f signals over a wide range of frequencies. Most test oscillators can also generate an a-f signal of 400 cycles which may be used to modulate the amplitude of the r-f signal at about 30 per cent. Some signal generators contain circuits and tubes to vary the frequency of the r-f signal, while others provide a jack so that external means may be used for frequency modulation.

Vacuum tubes are used in test oscillators to generate the r-f and a-f signals. Power to operate these tubes is usually supplied by the a-c power line, although batteries may be used.

Uses of the Test Oscillator in Radio Servicing

(1) Supply a modulated signal for the alignment of tuned circuits in a receiver.
(2) Supply a modulated signal for signal tracing procedure.
(3) Supply a signal for testing by signal injection.
(4) Act as a relatively accurate frequency standard.
(5) Locate tubes in the r-f section of a radio that are noisy in operation.

Need for Alignment

All modern receivers have trimming or padding capacitors, or variable inductance (iron core) transformers that need to be adjusted to set the tuned circuits to resonance at a specified frequency. This process is called aligning. At proper resonance, maximum sensitivity and selectivity are obtained. Vibration and weather conditions may cause the tuned circuits of a radio to change their resonant frequency slightly, necessitating the realignment of the tuned circuits to place the receiver in its best operating condition.

If no instruments are available for alignment, tune in a weak station on the receiver and adjust each trimmer for maximum volume of that station. Any such alignment of trimmers is done with the tuning capacitor of the receiver set to a station at the high frequency end of the range. There are several disadvantages in aligning a radio to an outside signal (station) for maximum volume, because improper alignment may result from any one of the following causes:

(1) The signal may fade.
(2) The intensity of the signal cannot readily be varied to any desired amount.
(3) The signal is not modulated by a steady note.
(4) The frequency of the signal may not be known.
(5) The frequency of the signal cannot be changed.
(6) The ear is not sensitive to small changes in loudness and is, therefore, a poor indicating device.

The r-f test oscillator overcomes the first five disadvantages while the use of an output indicating device overcomes the last. The test oscillator is constructed to supply a signal of constant strength and frequency once the controls have been set to secure the necessary frequency and signal strength values for alignment.

Controls of the Signal Generator

Note: Some instruments have more controls than others.

(1) Dial, calibrated with several frequency scales.
(2) Frequency range switch, with a position for each dial scale.
(3) Output multiplier to regulate the output in steps of decimal multiple.
(4) Output attenuator control, for fine regulation of the output.
(5) Modulation switch, which may be set for internal, external or no modulation of the r-f signal.
(6) On-off power switch.

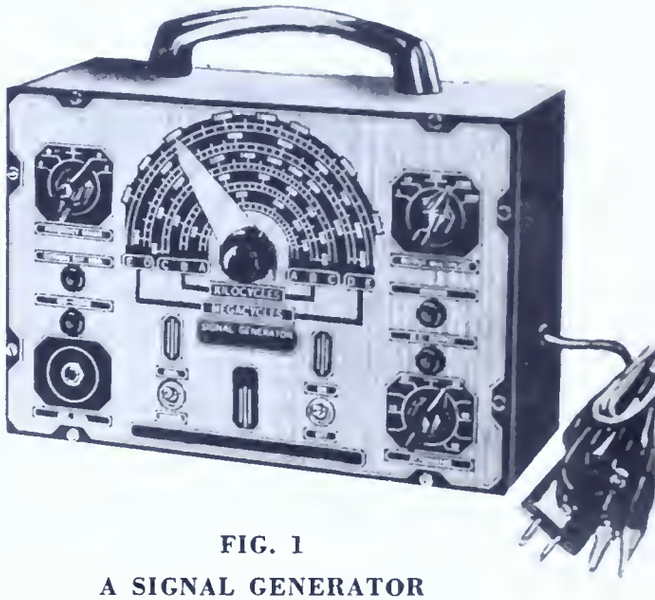

FIG. 1
A SIGNAL GENERATOR

Terminals

(1) Ground or chassis connection.
(2) Radio frequency output connection - this is called a "hot" connection (lead) because the r-f signal output is obtained between this connection and the ground of the instrument.
(3) Audio frequency output connection.
(4) Jack for external modulation.
(5) Line cord and plug.

How to Set the Frequency of the Signal Generator

(1) Examine the calibration of range switch and determine in which position the required frequency falls.
(2) Set range switch to that position.
(3) Select scale of dial which corresponds to range switch position.
(4) Set pointer of dial to the required frequency on that scale.

How to Adjust the Output of the Signal Generator

(1) Set the output multiplier control so that the approximate amount of the required r-f signal is delivered to the receiver under test.
(2) Adjust the fine control to regulate the signal to the exact amount required.
(3) Turn on the modulation switch to modulate the r-f signal (if internal modulation is to be used.)

A shielded lead is usually provided with the test oscillator to connect the r-f output of the oscillator to the radio. The shield is grounded to prevent the lead from picking up or radiating signals, either of which is undesirable. The entire test oscillator is likewise shielded and rigidly constructed to maintain frequency stability.

Connection

In aligning a t-r-f receiver, it is good practice to connect a 500 ohm resistor or a .00025 mfd. capacitor between the "hot" lead of the test oscillator and the input of the radio. See Fig. 2. This prevents the output attenuator from de-tuning the antenna coil and permits accurate alignment of the first tuned circuit (first r-f stage) in the receiver.

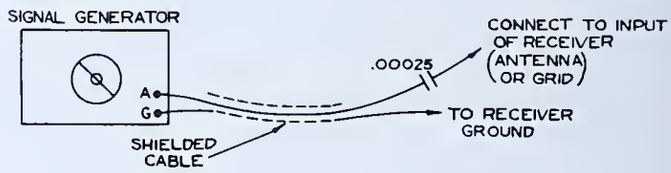

FIG. 2

Order of Alignment

In aligning the superheterodyne receiver, the first procedure is to connect the output of the test oscillator to the input of the i-f amplifier through a .05 mfd. capacitor. This prevents the resistance of the output attenuator of the test oscillator from shorting out any d-c voltages present at the input of the i-f amplifier. It also protects the attenuator from possible burn-out from those d-c voltages. The trimmers of the i-f amplifier are then adjusted for maximum output of the receiver.

While the i-f amplifier is being aligned, the oscillator section of the superheterodyne should be made inoperative to prevent unwanted signals from being amplified by the i-f amplifier. Such extraneous signals may give false readings in the output meter resulting in improper alignment of the receiver. The most convenient way to make the oscillator of the superheterodyne inoperative is to remove the oscillator tube (if there is a separate oscillator tube) or short the stator section of the oscillator tuning capacitor to the chassis.

After the i-f amplifier has been aligned, the test oscillator is connected to the antenna and ground (input) of the receiver through a .00025 mfd capacitor or a 500 ohm resistor; and the oscillator, mixer, and any r-f stages are aligned at the high frequency band of each band. The oscillator of the superheterodyne must be operating during this procedure.

When a receiver employing AVC is aligned with an output meter, the AVC system is usually shorted to remove AVC action which would otherwise cause inaccurate alignment of the receiver unless a very small r-f input voltage were used.

TRIMMER AND PADDER CAPACITORS

A trimmer or a padder is an adjustable capacitor used in radio receivers to permit the alignment of tuned circuits to resonate at specified frequencies.

In general, a trimming capacitor is one that shunts an inductance or a tuning capacitor. A padding capacitor is one that is in series with an inductance. Padding capacitors are used in the oscillator circuits of superheterodynes and are adjusted when the dial or tuning capacitor is set to the low frequency end of the range. The words padder and trimmer are often used loosely; padders may be called trimmers and trimmers called padders. Some manufacturers call an adjustable capacitor with a relatively large capacity a padder, while one with a small capacity may be called a trimmer.

The usual adjustable capacitor has two or more plates separated by a mica dielectric. A slotted or hex head screw, turned with a screw driver or special wrench, adjusts the distance between the plates, thus varying the capacity. Jolting may change the position of the screw, thereby changing the value of the capacity, necessitating readjustment of the unit.

Changes of humidity may affect the dielectric constant of the mica and change the value of the capacity. Some adjustable capacitors employ air as a dielectric; these are not as greatly affected by humidity but are more expensive and bulky.

Many i-f transformers employ an iron core inductance. The position of the core in the transformer can sometimes be changed by adjusting a screw. This varies the inductance of the unit and thus permits alignment of the circuit. This type of adjustment is not affected by humidity.

Most i-f transformers employ tuned primary and secondary circuits. Two trimmers on each unit are thus provided. Special i-f transformers may use one or three tuned circuits and have as many trimmers as tuned circuits. Practically all modern receivers mount the i-f trimmers in the same shield can that supports the i-f transformer, usually underneath the top of the can.

Trimmer capacitors in the r-f section of the radio are usually mounted directly on the tuning capacitor if the receiver employs only one tuning range. Receivers employing more than one tuning range mount the r-f trimmers on the shield can of, or near to, the r-f transformer whose secondary winding they shunt.

Padders are mounted in or on the shield can of the oscillator coil or on the chassis near the oscillator coil.

Some receivers employ a tuned wave trap circuit in the antenna lead to prevent signals of the intermediate frequency from entering the r-f amplifier circuits of the receiver. An adjustable capacitor in this circuit permits proper alignment for the elimination of the unwanted signal. The capacitor is usually located near the antenna input to the receiver. This is the only padder in the radio that is adjusted for minimum output.

THE OUTPUT METER

The output meter is a signal indicating device used to measure the voltage output of an audio amplifier or radio receiver. It may be used to indicate relative values for alignment purposes or exact values of output voltage for measuring gain.

Output meters are calibrated in a-c volts or in decibels; some inexpensive types may be calibrated only in relative units.

Small changes in volume are not perceptible to the ear; therefore, the ear is not a reliable volume indicator. An output meter, however, will give a direct indication of very slight changes in power output if a sensitive instrument and relatively low signal levels are used.

The following instruments may be used as output or signal indicating devices:

(1) Rectifier type a-c meter
(2) Neon bulb indicator
(3) Vacuum tube voltmeter
(4) Cathode ray oscillograph
(5) Electron eye tube as used in the signal tracer

An output indicator having a high voltage range would be connected between the plate of the output tube and chassis; one having a low range would be connected across the terminals of the output transformer voice coil winding. See Fig. 3. The 0.1 mfd. capacitor in the lead to the plate of the tube is used to isolate the indicator from the d-c voltage of the tube.

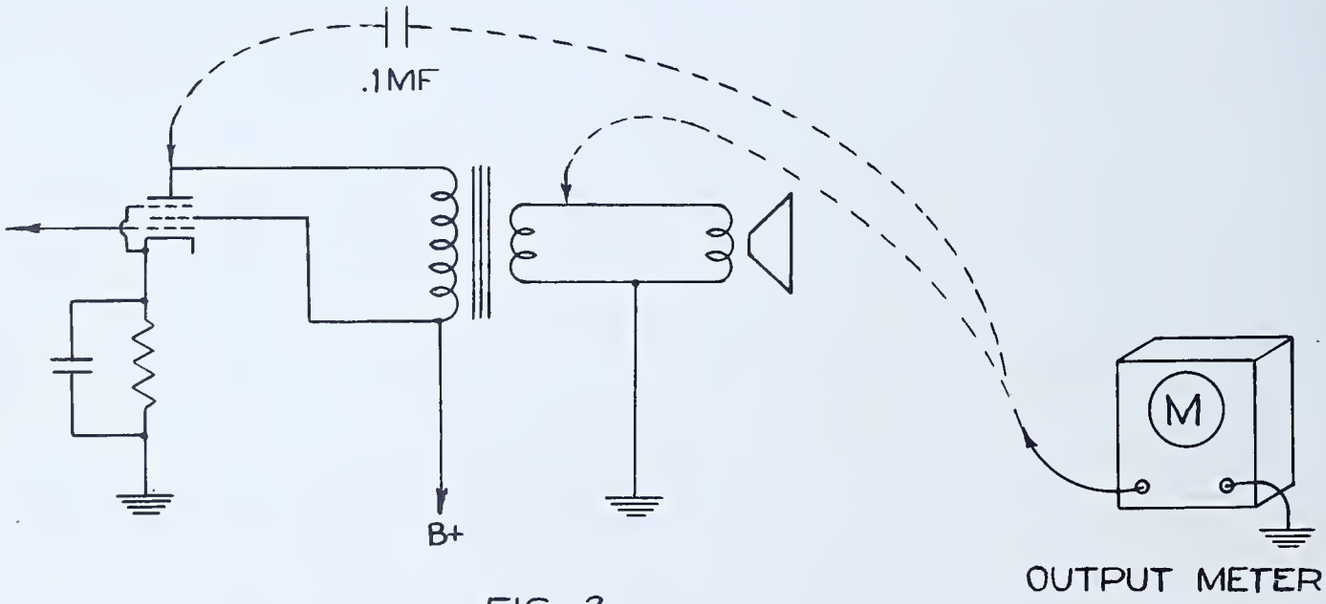

FIG.-3

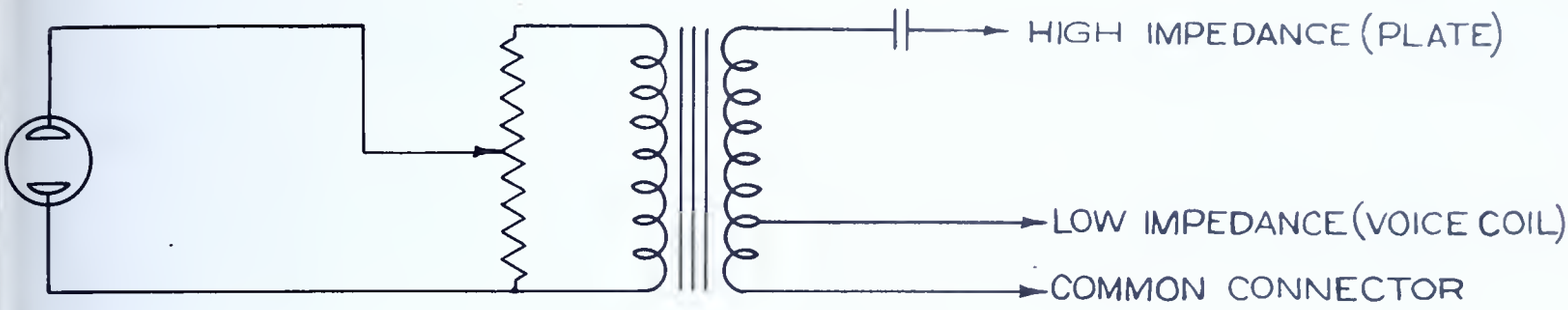

FIG.-4

Fig. 4 illustrates a neon output indicator. The a-f signal is fed through the transformer to a potentiometer. The neon bulb connects between the arm of the potentiometer and one side so that the intensity of the neon bulb may be set. Once this is set, any increase in light intensity indicates greater output from the radio.

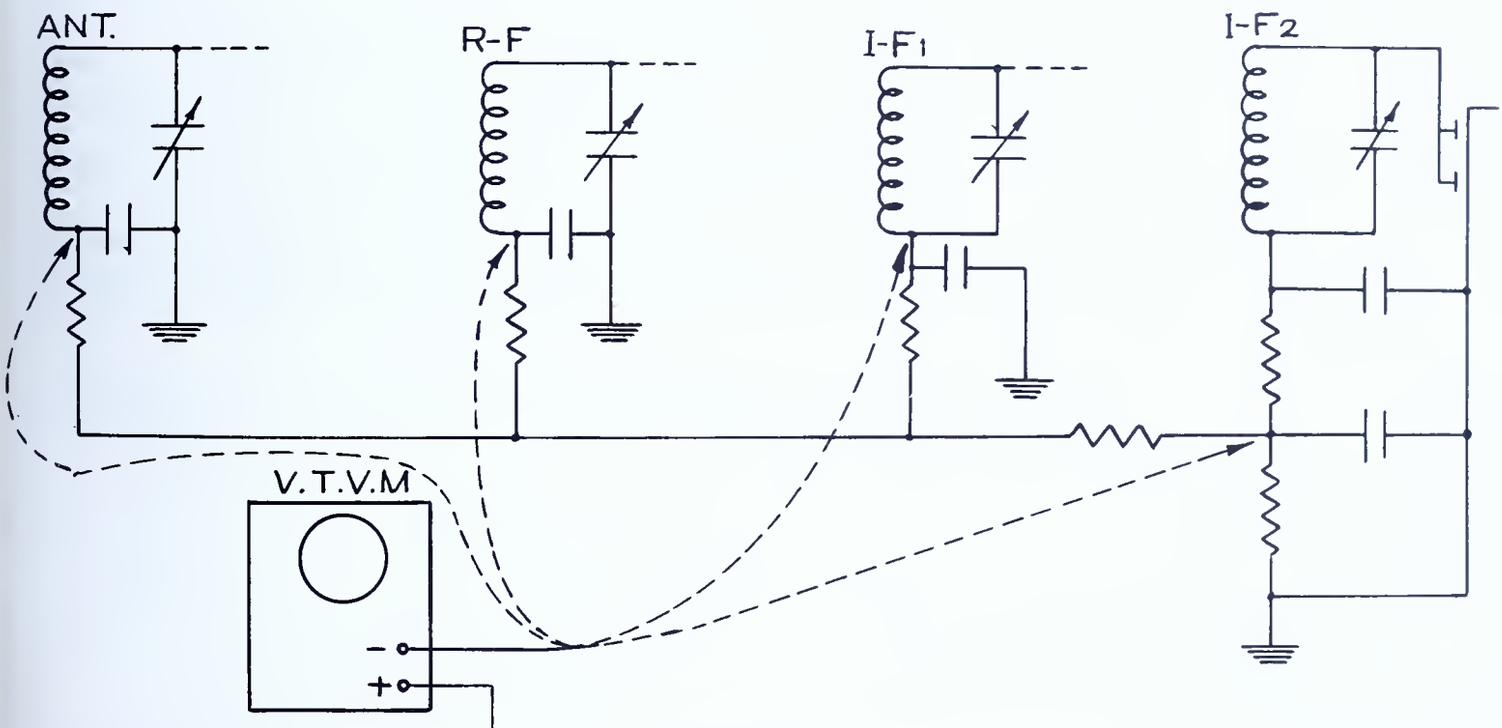

FIG.-5

When using the V.T.V.M. for aligning a radio using AVC, the instrument is connected to the AVC system. See Fig. 5. Maximum reading on the voltmeter is obtained when the trimmers of the radio are perfectly aligned. Since the V.T.V.M. measures the rectified r-f voltage in the receiver, no modulation in the test oscillator is necessary.

USE THE R-F OSCILLATOR FOR RECEIVER ALIGNMENT

General Information:

Manufacturers supply specific information for the alignment of their receivers which should be carefully studied. This job gives the general procedures in the alignment of receivers. The steps given here are to be used in conjunction with the manufacturer's manual but may be used independently if such a manual is not available.

The first part of this job is the alignment of a tuned radio frequency receiver; the second part is the alignment of a superheterodyne receiver.

Specifications:

Part I Align a tuned radio frequency receiver using the signal generator and output meter. Use 1400 kc. as the frequency of alignment.

Part II Align a superheterodyne receiver.

A. Align the i-f channel of the superheterodyne receiver at the specified intermediate frequency by using the signal generator and a V.T.V.M. Note: The correct frequency for alignment is obtained from service notes or manufacturer's instructions.

B. Align the r-f, mixer and oscillator of the superheterodyne receiver at specified frequencies by using the signal generator and V.T.V.M.

C. Align the short wave channels of an all-wave superheterodyne receiver at specified frequencies by using the signal generator and a V.T.V.M.

Tools needed:

1. Long nose pliers
2. Insulated screw driver
3. Insulated socket wrench

Equipment needed:

1. Test oscillator
2. Output meter
3. Vacuum tube voltmeter

Materials needed:

1. Hook-up wire - 3 ft.
2. Tuned r-f receiver
3. Superheterodyne receiver (all-wave preferred)
4. Alligator clips and test leads
5. 1- .05 mfd. 600v capacitor (paper)
6. 1- .00025 mfd. capacitor (paper or mica)
7. 1- 500 ohm resistor

I. Align a T-R-F Receiver

Procedure:

1. Remove radio chassis from cabinet.

2. Connect output meter to output tube (tube working into speaker) or to output transformer. See Fig. 3.

3. Connect lead from signal generator ground to chassis (ground post) of receiver.

4. Connect a shielded lead from the signal generator "hot" output (which is usually colored red to indicate the "hot" terminal) to the antenna post of receiver through a .00025 mfd. capacitor. See Fig. 2.

5. Connect radio and signal generator to a-c line and turn on units. Allow 10 minutes for heating of the oscillator.

6. Set receiver dial to 1400 kc. (or frequency as specified by manufacturer). If dial is not calibrated, plates of tuning capacitor should be set to be about 10 per cent meshed.

7. Set signal generator output attenuators to zero.

8. Set signal generator modulation switch to "internal" position.

9. Set the signal generator range switch and the dial to 1400 kc. (or manufacturer's specification).

10. Turn receiver volume control to maximum position.

11. Turn up output control of signal generator until output meter gives slight indication (about 1/10 of the full scale deflection).

12. Locate the trimming capacitor and secure the tool (screw driver or socket wrench) required to adjust it.

13. Adjust the trimmer in the detector circuit for maximum reading in output meter. Retard signal generator output control if needle of meter goes off scale.

14. Adjust the trimmer in the r-f stage preceding the detector for maximum meter reading. Again retard signal generator output control if meter needle goes off scale.

15. Adjust remaining trimmers in like manner, proceeding from detector to first r-f stage.

16. Adjust each trimmer again, proceeding from detector to first r-f stage. Operation is completed when each trimmer has been adjusted for maximum reading in the output meter.

II. Align a Superheterodyne Receiver

Procedures:

A. Align I-F Amplifier Trimmers

1. Remove the receiver chassis from its cabinet. Leave speaker connected to receiver.

2. Connect the d-c input of the V.T.V.M. to grid return of antenna coil secondary winding and chassis of the radio. Grid return is negative. Chassis is positive. See Fig. 6.

3. Connect r-f output of the signal generator to the control grid of the mixer tube through a .05 mfd. capacitor.

4. Connect the ground terminal of the signal generator to the chassis of the receiver.

5. Locate the oscillator section of tuning gang from the pictorial layout of the receiver or by tracing wiring on schematic diagram.

6. Short the stator plates of receiver oscillator tuning capacitor to the chassis of radio. (Use a short length of wire.)

7. Connect line cord of V.T.V.M., signal generator, and receiver to the a-c outlet and turn on each unit. Allow 10 minutes for heating.

8. Determine from schematic diagram or service notes the specified intermediate frequency of the receiver.

9. Set range switch and dial of signal generator to the determined intermediate frequency.

10. Set the V.T.V.M. to a high voltage d-c scale.

11. Turn modulation switch of the signal generator to the "on" or "internal" position.

12. Turn volume control of receiver to maximum.

13. Locate position of the i-f transformers and trimmers on the radio.

14. Turn up the output attenuator controls of the signal generator until an a-f note is heard in the speaker. If no note is heard with the output control advanced to full, proceed as follows; otherwise, continue with Step 15.

    a. Rotate dial of signal generator slightly one way and then the other to the position that results in the loudest signal from the speaker.

    b. Align trimmers for maximum volume in the speaker at this frequency.

    c. Rotate the dial of the signal generator toward the correct i-f value as long as the tone in the speaker is still audible.

    d. If the signal disappears before the correct setting is reached, align the trimmers at that dial setting which is nearest the correct setting of the signal generator where the note is still audible.

    e. Repeat Steps "c" and "d" until signal can be heard loudest at the correct i-f setting of the signal generator.

15. Turn off the output attenuator of the signal generator.

16. Set range switch of the V.T.V.M. to a 20 volt d-c scale (or scale nearest to 20).

17. Increase output of the signal generator until V.T.V.M. reads about one-third of full scale.

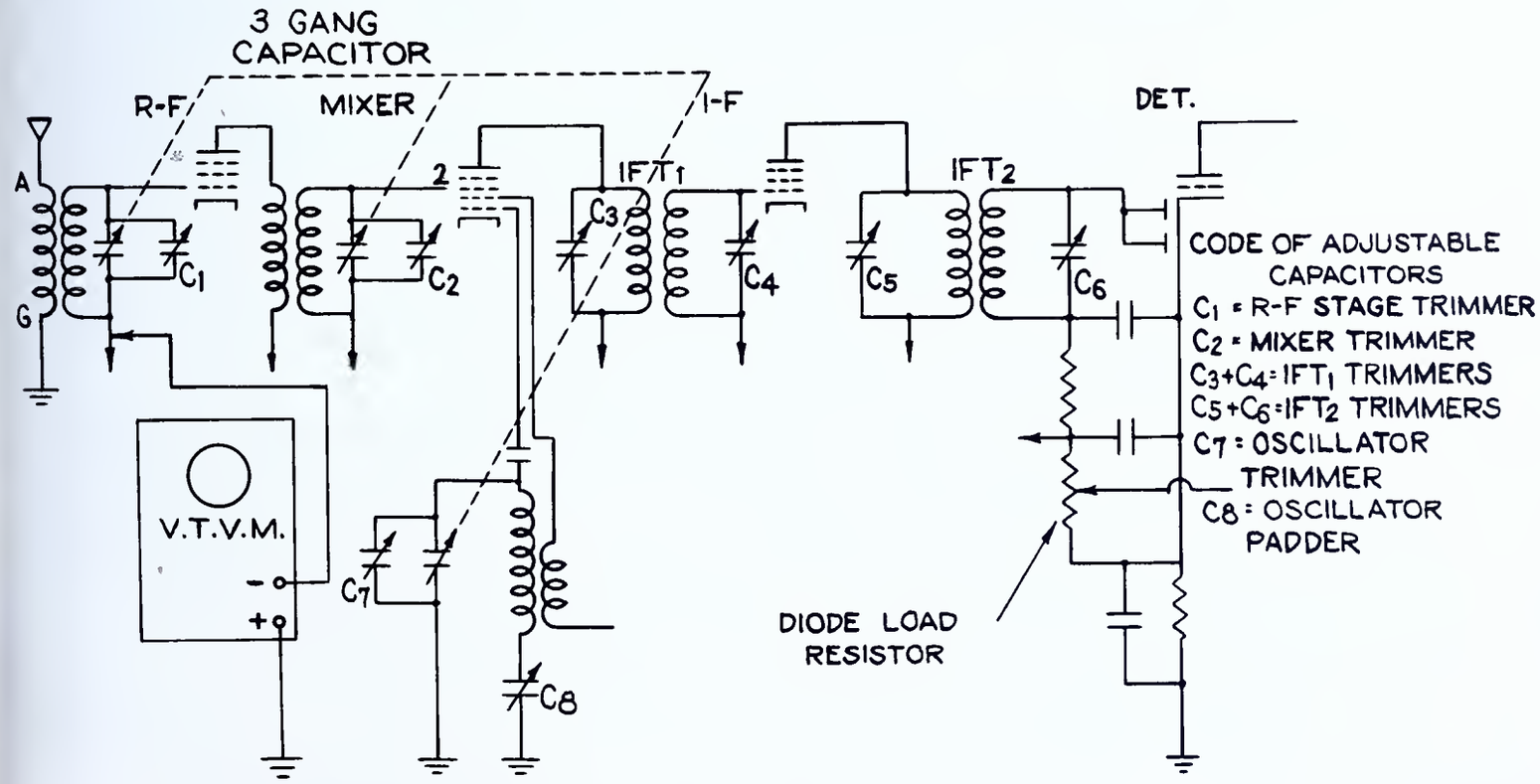

FIG.- 6

18. Adjust i-f trimmers for maximum reading in the V.T.V.M. Work from the output toward the input. In Fig. 6 this sequence will be C_6, C_5, C_4, and C_3.

    Note: Retard output attenuator of the signal generator when necessary to keep the indicator of the V.T.V.M. on scale.

19. Repeat Step 18, again adjusting trimmers for maximum reading in the V.T.V.M.

20. Remove connection between the test oscillator and the control grid of the mixer tube. Do not remove the circuit wiring to the control grid.

21. Remove shorting wire from oscillator section of tuning capacitor. This completes the alignment of the i-f amplifier.

B. Align R-F, Mixer, and Oscillator Trimmers

1. Connect "hot" lead from signal generator to the antenna connection of the receiver through a 250 mmf. mica capacitor.

2. Set test oscillator to 1400 kc.

3. Tune radio to 1400 kc. Locate the r-f, mixer, and oscillator trimmers and padders.

4. Adjust oscillator trimmer C_7 for maximum signal indication on the V.T.V.M.

   Note: Use a low output from signal generator so that there is only a small reading on the V.T.V.M. If V.T.V.M. goes off scale during any adjustments, retard the output attenuator.

5. Adjust mixer trimmer C_2 for maximum reading on V.T.V.M.

6. Adjust r-f trimmer C_1 for maximum reading on V.T.V.M.

7. Rotate the dial of the signal generator to 600 kc.

8. Set dial of receiver to 600 kc.

9. Adjust oscillator padding capacitor C_8 so that a maximum reading on the V.T.V.M. is obtained.

10. Set the dial of the receiver to slightly higher than 600 kc. (approximately 610 kc.)

11. Adjust the oscillator padder for a maximum reading on the V.T.V.M. If this reading is greater than that obtained in Step 9, make further adjustments of padder and dial at still slightly higher frequencies (approximately 620 kc.) to find the position of the dial where the greatest reading on the V.T.V.M. is obtained.

    If the reading obtained in this step is lower than that obtained in Step 9, make several adjustments of dial and padder at slightly lower frequencies to determine at which position of dial a maximum reading in the V.T.V.M. may be secured. This process of adjusting the dial to slightly different frequencies while adjusting the padder at each frequency to determine the position of maximum V.T.V.M. reading is called "rocking" the dial or tuning capacitor.

12. Make final adjustment of oscillator padder at that dial setting where the maximum V.T.V.M. reading was obtained.

13. Repeat Steps 2 to 11 and then Steps 2 to 6 to check the alignment of receiver. This completes the alignment if the receiver does not have a wave trap. See Note below Step 16.

14. If receiver has a wave trap, set signal generator to the specified intermediate frequency value and proceed as indicated in Steps 15 and 16.

15. Advance output attenuator to give a maximum reading on the V.T.V.M.

16. Adjust wave trap padder for minimum reading on the V.T.V.M. This completes the alignment procedure for maximum sensitivity.

    Note: If the calibration of the dial of the receiver does not coincide with that of the signal generator at low frequencies, the following parts in the radio should be checked:

    a. Plates of tuning capacitors to determine if they are bent.
    b. Oscillator coil to see if it is defective.
    c. Fastening of dial to tuning capacitor; this should be firm, allowing no slipping.

C. Align An All-Wave Receiver

If the receiver to be aligned is of the all-wave variety, the same general procedure should be followed for alignment of each band or range as was used for the alignment of the r-f, mixer, and oscillator trimmers on the broadcast band. The i-f section of a radio, after being once properly aligned, need not be aligned for each band of an all-wave receiver. To align the receiver on another band:

1. Replace the .0025 mfd. capacitor in the antenna lead with a 500 ohm resistor.

2. Set the signal generator to give a signal at the high frequency end of the receiver band under consideration. (Use frequency specified by manufacturer for the particular band.)

3. Set the radio to that range and its dial to the frequency of the signal generator.

4. Adjust the oscillator trimmer for maximum reading on the V.T.V.M. If two peaks are found, adjust to the peak which occurs when the trimmer capacitor screw is farthest out (least capacity).

5. Adjust mixer and r-f trimmers for maximum reading on the V.T.V.M.

6. Set signal generator and dial of receiver to frequency at low frequency end of the band under consideration. (Use frequency specified by manufacturer for the particular band.)

7. Adjust oscillator padder for maximum output indication on the V.T.V.M.

8. Repeat Steps 2, 3, 4, and 5. This completes alignment for that particular band.

9. Repeat Steps 1 to 8 for all other bands not yet aligned.

QUESTIONS

Place the answers to these questions in your notebook or on form as directed by instructor.

1. What is the r-f test oscillator?
2. What is the frequency of the usual a-f signal generated in most test oscillators?
3. What is the usual percentage of modulation in the signal generator?
4. Are all test oscillators frequency modulated?
5. What device is used in the test oscillator to generate the signal?
6. What supplied the power to operate the test oscillator used in this job? What other source of supply might be used?
7. Name five uses of the test oscillator.
8. In what type circuit is a trimmer used? A padder?
9. Why are tuned circuits in a radio usually aligned to resonate at a specified frequency?
10. What causes tuned circuits to change their resonant frequency?
11. How can alignment of a radio be accomplished without a test oscillator?
12. Name five disadvantages of aligning a radio without a test oscillator.
13. What is an output meter?
14. Why is it used in addition to the test oscillator when aligning a radio?
15. What is the purpose of the calibrated dial on the test oscillator? The range switch? The output attenuator? The output multiplier? The modulation switch?
16. How is the test oscillator set to a desired frequency?
17. What type signal is required for alignment when using the output meter?
18. What external connections are generally available from the test oscillator?
19. What is the advantage of using a shielded lead from the output of the test oscillator?
20. Why should the test oscillator be shielded and of rigid construction?
21. During which alignment procedure was the 500 ohm resistor used? The .00025 mfd. capacitor?
22. Why is a 500 ohm resistor or a .00025 mfd. capacitor connected between the test oscillator and the receiver to be aligned?
23. Which section of the superheterodyne is aligned first?
24. What should be the value of the capacitor placed in the oscillator test lead in the alignment of the t-r-f receiver?
25. Why is the oscillator of the superheterodyne made inoperative during the alignment of the i-f amplifier? How is this done?
26. Why is the AVC action usually removed when aligning with an output meter?

References:

Everitt, W. L. et al., Fundamentals of Radio, pp. 203-206.
Henney, K., Principles of Radio (Fourth Edition), pp. 411-412.
The Radio Amateur's Handbook (Any Edition) A. R. R. L.,
Chapter on Measurements and Measuring Equipment.
The Radio Handbook (Any Edition), Editors and Engineers,
Chapter on Test and Measuring Equipment.

UNIT 13

USE OF THE OSCILLOGRAPH FOR RECEIVER ALIGNMENT AND ANALYSIS

Reference DD — The Alignment of a Receiver with the Oscillograph and Frequency Modulated Oscillator. Page 240

JOB SHEET 13 — PART I — ALIGN A SUPERHETERODYNE RECEIVER WITH A FREQUENCY MODULATED OSCILLATOR AND AN OSCILLOGRAPH. Page 243

A. Align for Maximum Selectivity. Page 244

B. Align for a "Flat Top" Curve. Page 248

Reference EE — Causes and Remedies of Receiver Hum. Page 249

JOB SHEET 13 — PART II — ANALYZE A RECEIVER FOR HUM AND DISTORTION. Page 251

A. Determine the effects of Hum Voltage in a Receiver on the Wave Pattern of the CRO. Page 252

B. Analyze a Receiver for Hum. Page 254

Reference FF — Causes and Remedies of Receiver Distortion. Page 256

C. Analyze a Receiver for Distortion Page 258

THE ALIGNMENT OF A RECEIVER WITH THE OSCILLOGRAPH AND FREQUENCY MODULATED OSCILLATOR

General Information:

The cathode ray oscillograph is a peak voltmeter in which timing is possible with no appreciable amount of inertia. It can be used as a high resistance voltmeter, but will also indicate quality as well as quantity. The amount of voltage is indicated vertically on the screen. The ability to time makes it possible to spread the voltage out horizontally on the screen; and since the inertia is small, the indication of voltage and time makes a wave form pattern on the screen. See Jobs 1 and 7.

A frequency modulated (FM) oscillator must be used with the oscillograph for visual alignment of receivers. Some service oscillators contain a unit within the oscillator which varies the frequency of the oscillator by electronic means. Other oscillators can be frequency modulated only by an external unit. Such a unit is generally called a "wobbler", because it "wobbles" the oscillator frequency above and below a mean frequency setting at a constant rate. More correctly it is called a frequency modulator, since it modulates the frequency of the oscillator.

A frequency modulated signal is one that shifts back and forth in frequency at a certain rate. The amplitude of the signal is not varied. In most frequency modulated test oscillators the amount of shift or sweep of the signal may be varied to suit any need.

Synchronizing voltage impulses are supplied by the "wobbler". These impulses are fed to the synchronizing posts of the oscillograph and are used to lock the pattern on the screen in step with the modulation.

When several signal voltages of different frequencies are fed into a tuned circuit, maximum amplification is obtained at the frequency to which the circuit is resonant. A frequency slightly off the resonant frequency is amplified less, while one even farther off resonance is not amplified at all. Frequencies very far off resonance are suppressed.

If an intermediate frequency transformer is tuned to 465 kc., the amplification of a band of signal frequencies from 455 kc. to 475 kc., by that transformer, might be shown graphically as indicated in Fig. 1.

In this illustration the pattern on the screen of the CRO indicates relative amplification or amplitude of voltage vertically and time or frequency horizontally.

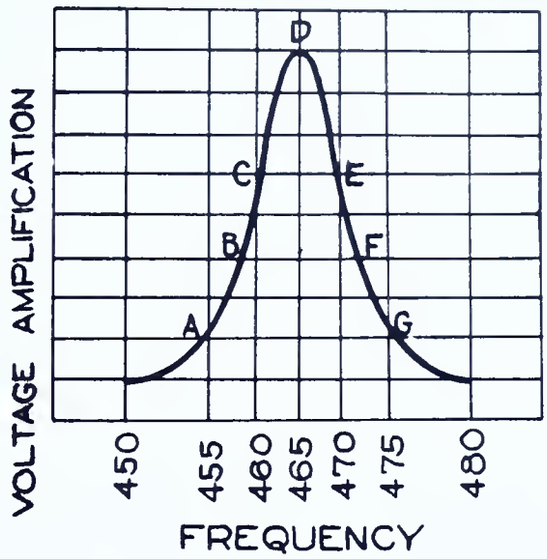

FIG.-1

At the time the signal starts at 455 kc., the amplification of the transformer is low, so the oscillograph indicates a spot of light at the Point A. As the frequency shifts toward 465 kc., the amplification increases, being greater at B, and still more at C. At Point D, amplification is maximum. After Point D has been reached, the frequency is increased, resulting in a shift away from the frequency of resonance. This results in reduced amplification from the circuit represented by Points E, F and G. At G the frequency has reached 475 kc. and now starts back to 455 kc. due to the action of the frequency modulator. It sweeps back and forth in this manner between 455 kc. and 475 kc. usually 120 times a second. Its sweep frequency then is 120 cycles per second. The cathode ray beam follows the path through A, B, C, D, E, F, G and returns in such rapid succession that it gives the appearance of a solid trace line on the screen as shown in Fig. 1.

Adjusting the trimmers on the i-f transformer will cause the position of the curve to change, since the maximum amplification of the transformer will now occur at some different frequency. This fact makes it possible to align circuits by observing the selectivity curve of the aligned circuit as adjustments are made.

The frequency modulated signal is connected to the input of the tuned circuit to be aligned. The oscillograph is connected to the output of the demodulator following the tuned circuit. See Fig. 2.

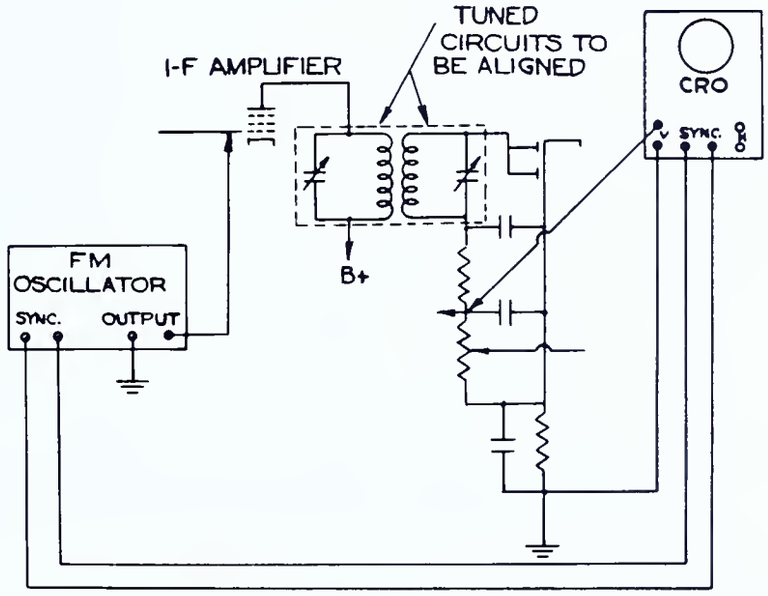

FIG.-2

METHOD OF CONNECTIONS

The frequency in this example is varying between 455 kc. and 475 kc. 120 times a second. The time base of the CRO must be synchronized with the sweep frequency rate of the frequency modulated oscillator; in this case, to 1/120th of a second, so that a complete cycle of frequency change will appear on the screen.

Many receivers are aligned for maximum selectivity which results in the greatest sensitivity. While the ability to receive the desired signal to the exclusion of other signals is obtained by maximum selectivity, too great selectivity will result in poor tone quality. A very sharp selectivity curve results in reduced amplification of the higher frequency audio signals. This will cause frequency distortion to be introduced in the receiver. Where fidelity of tone reproduction is a major factor, tuned circuits should be aligned for a "flat top" selectivity curve (Fig. 3B). This permits signals modulated by higher audio frequencies to pass through the tuned circuits.

Some "high fidelity" receivers employ a switch that may be adjusted to permit the selectivity to be sharp or broad.

Fig. 3 illustrates selectivity curves for sharply tuned circuits (curve A), as well as more broadly tuned circuits represented by a flat top curve (B) and a broad curve (C).

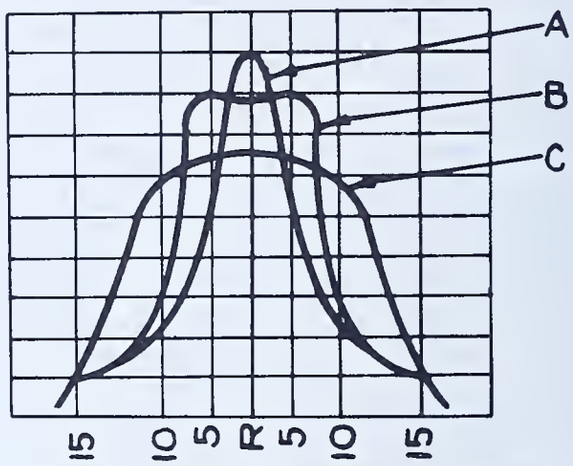

A- MAXIMUM SELECTIVITY
B-"FLAT TOP"-GOOD FIDELITY AND SELECTIVITY
C- GOOD FIDELITY - POOR SELECTIVITY
FIG.- 3

Part I ALIGN A SUPERHETERODYNE RECEIVER WITH A FREQUENCY MODULATED OSCILLATOR AND AN OSCILLOGRAPH

General Information:

Either a test oscillator with an external "wobbler" or a test oscillator incorporating a frequency modulating device within the unit itself may be used in these jobs. If an external "wobbler" is used, the connection of the "wobbler" to the oscillator will make the frequency calibration of the oscillator incorrect.

By making preliminary adjustments of trimmers of the receiver when the "wobbler" is not connected for frequency modulation, the correct setting of the trimmers is secured. The "wobbler" is then connected to obtain frequency modulation and the oscillator is set to the frequency of the receiver without regard to the oscillator's calibration.

The procedure in these job sheets follows the above so that errors in frequency setting are minimized.

If the test oscillator is internally frequency modulated, the calibration of the dial is correct for either frequency or amplitude modulation and this job procedure may still be followed.

Specifications:

Align a superheterodyne receiver by using a frequency modulated oscillator and an oscillograph.

A. For maximum selectivity
B. For "flat top" selectivity curve of approximately 15 kc. band width at top

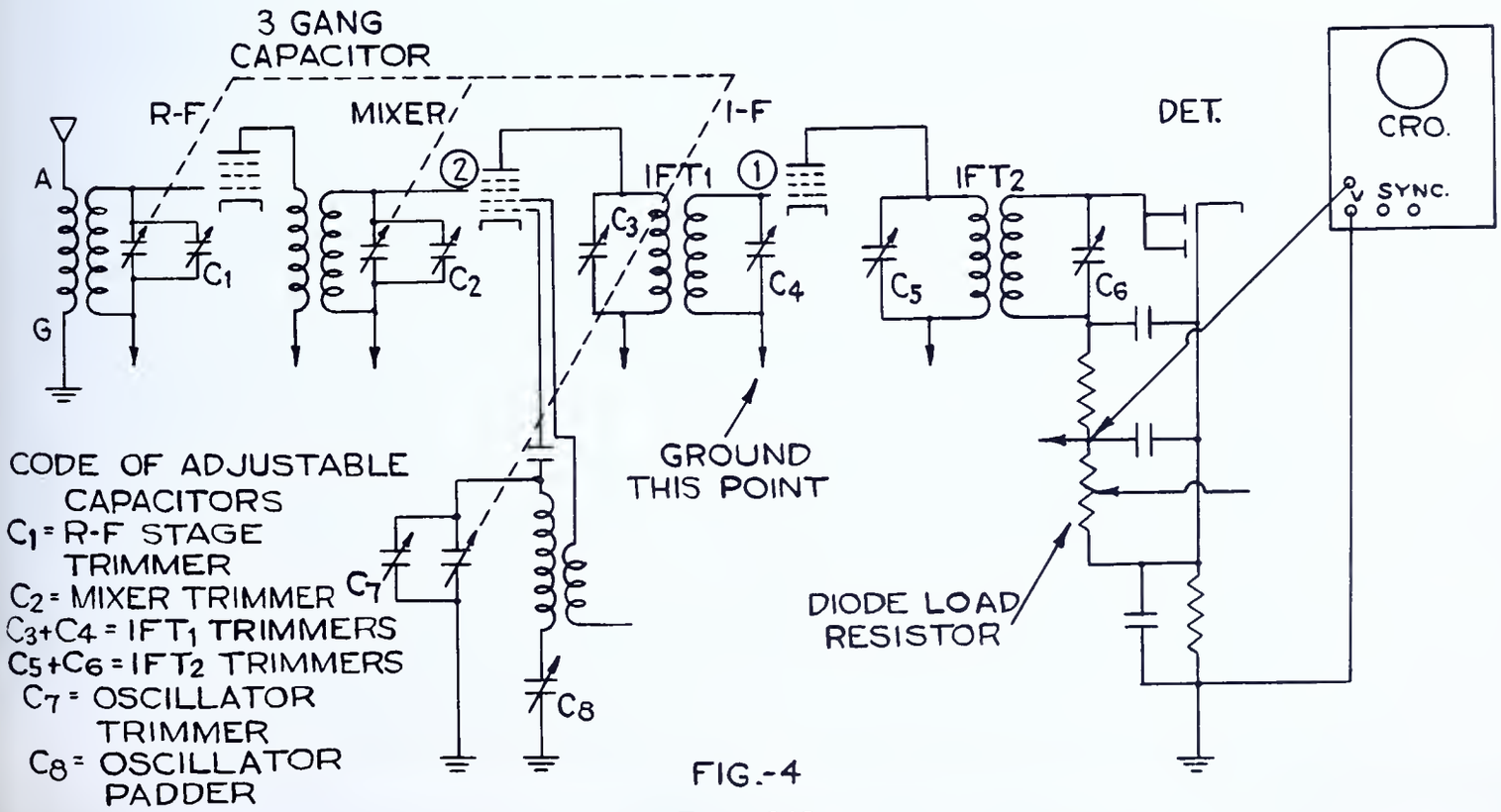

FIG.-4

Tools needed:

1. Insulated aligning wrench
2. Insulated screw driver

Materials needed:

1. Alligator clip
2. Test leads (2 sets)

Equipment needed:

1. Superheterodyne receiver
2. Oscillograph
3. Frequency modulated oscillator

A. Align for Maximum Selectivity

Procedure:

1. Study instruction sheets accompanying oscillograph and frequency modulated signal generator.

2. Remove receiver chassis from cabinet. Leave speaker connected to the receiver.

3. Examine the radio and the schematic diagram of receiver to locate trimming capacitors and diode load resistor as indicated in Fig. 4.

4. Label the trimmers on the radio according to the code of adjustable capacitors in Fig. 4.

5. Connect the "vertical" terminals of the CRO to the diode load resistor as indicated in Fig. 4.

6. Connect the oscillator test leads to the FM oscillator as indicated in Fig. 5. The alligator clip is connected to the test lead going to the "hot" output terminal of the test oscillator.

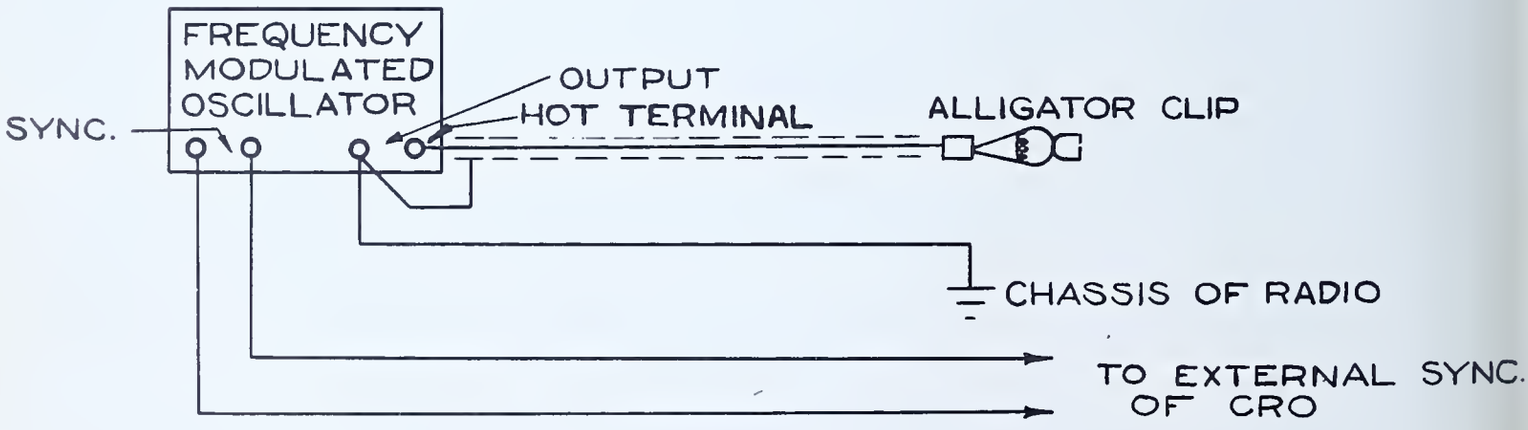

FIG.-5

7. Connect the oscillator ground test lead to the chassis of the radio.

8. Remove the clip from the control grid of the i-f amplifier tube.

9. Connect the alligator clip to the control grid of the i-f amplifier tube (Point 1, Fig. 4). If a 6SK7 tube is used in this circuit, connect the alligator clip to the control grid without removing the i-f transformer grid lead.

10. Short out the AVC system of the receiver. (Connect a wire between grid return of the i-f amplifier and chassis.)

11. Set controls of the signal generator as follows:

    a. The range switch and the dial for the proper intermediate frequency of the receiver.

    b. Modulation switch to amplitude modulation position.

    c. Output attenuator to half maximum output position.

12. Connect the test oscillator, receiver, and oscillograph to the a-c line and turn on these units. Allow a few minutes for heating.

13. Short the stator of the oscillator tuning capacitor to the rotor by means of a piece of wire.

14. Adjust the CRO as follows:

    a. Focus and intensity controls for a clearly defined line.

       Caution: Do not permit a line of strong intensity to remain stationary on the screen for any length of time. This will burn and damage the screen. Keep the intensity of the line low but distinct.

    b. Vertical amplifier set to "on" or "high" position. Vertical amplifier gain control should be adjusted to its maximum position.

    c. Horizontal amplifier set to "timing" or "internal" position. Horizontal amplifier gain control should be set so that the wave form is properly spread on the screen.

    d. Range and frequency controls for a wave form of the modulating a-f voltage from the test oscillator. This is usually a 400 cycle note.

15. Adjust trimmers C_5 and C_6 of the intermediate transformer (IFT_2) preceding the detector in the receiver, for the maximum height of the wave form on the screen of the CRO.

    Note: Output attenuator of test oscillator may be varied to adjust the height of the pattern on the CRO screen. In general the output attenuator of the test oscillator should be retarded as far as practical.

16. Connect the synchronizing voltage output of the test oscillator to the synchronizing voltage terminals of CRO. See Fig. 5.

17. Set test oscillator for frequency modulation; set sweep control to 20 kc.

18. Set the synchronizing switch of CRO to "external".

19. Adjust the frequency of the test oscillator until a single trace resonance curve pattern appears on the screen of the CRO.

20. Adjust trimmers C_5 and C_6 and observe effect on the trace in the screen of the CRO.

21. Make final adjustment of C_5 and C_6 so wave pattern is symmetrical and of maximum height.

22. Remove alligator clip from control grid of i-f amplifier tube (Point 1, Fig. 4).

23. Connect original clip (on lead from IFT_1) to the control grid of the i-f amplifier tube.

24. Remove the clip from the control grid of the mixer tube (Point 2, Fig. 4).

25. Connect alligator clip to the control grid of the mixer tube.

26. Adjust trimmers (C_3 and C_4) of IFT_1 so that a single trace pattern of uniform symmetry and maximum height is obtained on the screen of the CRO. Retard the output attenuator of the test oscillator to the lowest point at which a pattern of sufficient height is obtained. This completes the alignment of the i-f section of the receiver.

27. Remove short from oscillator section of tuning capacitor.

28. Remove alligator clip from the control grid of the mixer tube.

29. Replace proper clip to control grid of the mixer tube.

30. Connect alligator clip to antenna terminal of receiver.

31. Set test oscillator for a 1400 kc. amplitude modulated signal.

32. Tune receiver to frequency of test oscillator (1400 kc.).

33. Set controls of CRO for the pattern of the modulating a-f signal, as in Step 14.

34. Adjust trimmer C_7 (oscillator of receiver) so that the maximum height of the pattern is obtained on the screen of the CRO. Retard output attenuator of test oscillator to keep pattern within size of screen.

35. Adjust trimmers C_1 and C_2 (r-f and mixer trimmers) for maximum height of pattern in screen of the CRO.

36. Set the test oscillator to 600 kc.

37. Set the receiver dial to 600 kc. and adjust the oscillator padder C_8 for maximum height of the pattern in the screen of the CRO.

38. Set the receiver dial to several positions (about 10 kc. apart) above and below 600 kc. At each position, adjust C_8 and note the height of the pattern. Dial and padder of receiver should be finally adjusted to the position where maximum height of pattern is obtained.

39. Set test oscillator to 1400 kc.

40. Tune receiver to frequency of the test oscillator.

41. Align the oscillator, mixer, and r-f trimmers C_7, C_2, and C_1 for maximum height of pattern in the screen of the CRO.

42. Set test oscillator for frequency modulation and CRO for proper synchronization with test oscillator.

43. Adjust frequency of test oscillator until a resonance curve of uniform symmetry and single trace pattern is obtained.

44. Adjust trimmers C_7, C_2, and C_1 for a pattern of maximum height and uniform symmetry. A single trace pattern should be obtained.

45. Set test oscillator to 600 kc.

46. Tune the receiver to frequency of the oscillator. This is indicated when a pattern of greatest symmetry and height is obtained.

47. Repeat Step 38. Final adjustment should be made where the most symmetrical single trace pattern is obtained.

48. Repeat Steps 39, 40, and 44 for the final alignment at the high frequency end.

49. Turn off equipment. Disconnect and return it to stock room.

B. Align for a "Flat Top" Curve

Procedure:

Note: The procedure for "flat top" alignment of a superheterodyne receiver is similar to that given in Part A with the exception that the trimmers are adjusted to obtain a curve having a relatively flat top and steep sides as indicated in Fig. 6. The only deviations from the procedure of Part A are given in the steps listed below:

1. Set the equipment and perform preliminary alignment as given in the first 16 steps of Part A.

2. Set the test oscillator for frequency modulation and the sweep or band width control for 30 kc.

3. Set the synchronizing switch to external position.

4. Adjust frequency of test oscillator until a single trace resonance curve pattern appears on the screen of the CRO.

5. Adjust the IFT_2 trimmers C_5 and C_6 for a flat top curve as shown in Fig. 3(B).

6. Perform Steps 22 to 25 of Part A to connect the alligator clip from signal generator to the control grid of the mixer tube.

7. Adjust IFT_1 trimmers C_3 and C_4 for a flat top curve as shown in Fig. 3(B).

8. Perform Steps 27 to 43 of Part A.

9. Adjust oscillator, mixer, and r-f trimmers C_7, C_2 and C_1 to "fill in" the center of the resonance curve, resulting in a pattern as in Fig. 6.

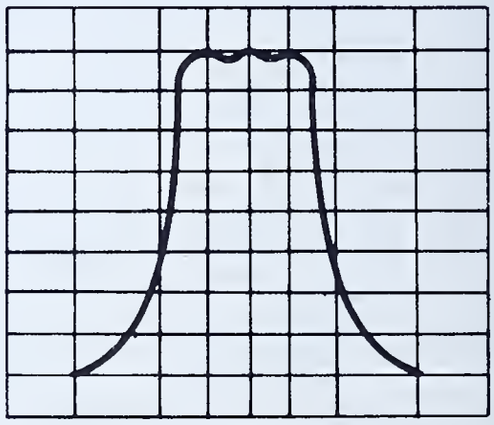

OSCILLATOR-MIXER TRIMMER ADJUSTED TO FILL IN DIP
FIG.- 6

10. Set the oscillator to 600 kc.

11. Tune the receiver to the frequency of the test oscillator and adjust oscillator padder while "rocking" the gang as in Step 38 of Part A to obtain a pattern as illustrated in Fig. 6.

12. Set the test oscillator and receiver to 1400 kc. and adjust trimmers C_7, C_2 and C_1 to obtain the pattern illustrated in Fig. 6.

13. Turn off equipment. Disconnect equipment and return it to stock room.

CAUSES AND REMEDIES OF RECEIVER HUM

There are many causes of hum in a receiver. Most causes of hum in an a-c receiver are due to the a-c and pulsating d-c voltages associated with the power supply. Receivers operating from batteries are thus much less liable to have hum than those powered by a-c. Some of the causes and remedies of hum are listed below.

1. Open filter capacitors:
   Replace capacitor.

2. Shorted or inadequate filter chokes:
   Install new choke.

3. Improperly connected hum-bucking coil in speaker:
   Reverse connections to hum-bucking coil.

4. Audio transformers or plate impedance coils mounted at such an angle that they "pick up" or have hum voltage induced in them by the a-c magnetic field which surrounds the power transformer or input filter choke:
   Mount audio transformer or plate impedance coil (plate choke) so that minimum hum voltage is induced in these units. This is most readily done by rotating the base of the audio transformer or plate impedance coil to a position that results in minimum hum while the receiver is operating. The unit must then be mounted in this position.

5. Wire leads carrying alternating current or pulsating direct current in close proximity to grid and plate r-f or a-f leads:
   Dress leads so they are remotely located. Twist filament leads.

6. Lack of good external ground connection:
   Make good ground connection.

7. Defective line capacitor (or lack of one in the circuit design):
   Install or replace line capacitor.

8. Improper connection of leads to chassis in receiver:
   Re-wire leads to chassis connections so that power supply chassis connections are all made at one point. Use another point for r-f and a-f chassis connections.

9. R-f or i-f transformer preceding the demodulator so mounted that hum voltages are induced in this transformer by the a-c field of the power transformer:
   Turn the base of the transformer for minimum hum pickup.

10. AVC leads and capacitors located in close proximity to leads carrying alternating current:
    Dress leads carrying alternating current or pulsating direct current away from other leads or parts.

11. An open connection in the grid circuit of the tubes:
    Repair or replace defective part of connection.

12. A short circuit between wires carrying alternating current and any other wires: Clear the short, and insulate wires or connections.

13. Improper or lack of shielding of grid and plate leads in the first a-f stages:
    Shield grid and plate leads or resistors and coupling capacitors in the circuits of those a-f stages, and ground the shielding. Dress the grid and plate leads close to chassis.

14. An open volume control potentiometer in a-f stage:
    Replace volume control.

15. Antenna located in an a-c field:
    Re-locate the antenna. Changing the direction of the antenna will usually improve this trouble.

16. Defective (shorted, noisy, or leaky) tubes:
    Replace such tubes.

17. Radiation from rectifier tubes or wiring:
    Shield tubes or wiring.

18. Inadequate filtering of original design:
    Re-design filter circuit or layout, adding capacity or inductance in filter circuits.

19. Defective (open, corroded, or unbalanced) center tap resistor on filament type tubes heated with a-c:
    Adjust, repair or replace resistor.

20. Leaky insulation between wiring, parts and terminals due to dampness:
    Dry out by baking, or replace wiring.

21. Loose laminations in power transformer or filter choke which cause mechanical vibration resulting in a humming sound direct from the unit, although not through the circuit:
    Tighten the mounting or strap on the unit which holds the laminations together.

Part II ANALYZE A RECEIVER FOR HUM AND DISTORTION

General Information:

Although the speaker connected to the output of a receiver gives an audible indication of hum, the CRO connected in similar fashion gives an exact picture of the hum voltage and is thus more reliable as a hum indicator.

In Part A of this job, several conditions which cause hum are introduced into a receiver. This simulates circuit failures that may actually happen, and permits observation of the resulting hum.

In Part B, a procedure is given for locating hum in the a-f, i-f and r-f sections of a receiver. At that step of the procedure where hum may be located, the items which might cause that hum are listed.

Specifications:

A. Make circuit failures in a receiver to determine the effect of the resulting hum as indicated by the CRO.

B. Check a receiver for hum in a-f, i-f, and r-f stages, using the CRO.

Tools needed:

1. Soldering iron
2. Long nose pliers
3. Diagonal cutting pliers
4. Screw driver

Materials needed:

1. Hook-up wire, 6 ft.
2. Solder
3. Shielded test lead
4. 1- 0.5 mfd. capacitor
5. 1- .0005 mfd. capacitor
6. Friction tape

Equipment needed:

1. Superheterodyne receiver
2. Signal generator
3. Cathode ray oscillograph

A. Determine the Effect of Hum Voltage in a Receiver on the Wave Pattern of the CRO

Procedure:

1. Connect the receiver and the CRO to the a-c line.

2. Connect the "vertical" terminals of the CRO to the a-c line, using a 0.5 mfd. capacitor in series with one lead.

3. Set the controls of the CRO so that two cycles of the 60 cycle wave appear on the screen. Leave CRO at this setting during Steps 3 to 12.

4. Remove connections between the "vertical" terminals of the CRO and the a-c line.

5. Connect the output of the receiver (voice coil winding of the output transformer) to the "vertical" terminals of the CRO. See Fig. 8, Page 257.

6. Connect the signal generator to the a-c line and turn on.

7. Connect the ground of the signal generator to the chassis of the receiver.

8. Connect the "hot" r-f output of the signal generator to the antenna connection of the receiver through a .0005 mfd. capacitor and shielded test lead.

9. Wrap about 5 turns of the end of a six-foot piece of insulated wire around the lead to the plate of the rectifier tube.

10. Tape this wrapping so that there is no possibility of a short between the two wires.

11. Turn on the power switch of the radio and set the volume control to maximum.

12. Set the signal generator to 1400 kc. and tune the receiver to the signal generator.

13. Wrap the other end of the insulated wire around the following points, one at a time, and notice the wave form in the CRO screen: (This illustrates the hum voltages induced at these points.)

    Note: Vertical amplifier gain control must be adjusted to keep height of pattern constant.

    a. Control grid wire of the r-f tube.

    b. Control grid wire of the mixer tube.

    c. Control grid of the i-f amplifier tube.

d. Wire to the diode plate of the demodulator tube.

e. Control grid lead of the first audio amplifier tube.

f. Control grid lead of the second audio amplifier tube.

14. Turn off power switch of the receiver.

15. Unwrap both ends of the insulated wire test lead and remove from receiver.

16. Perform the following operations to determine the effect on the hum voltage. The receiver should be turned off while any connections are changed, and turned on when observations are made. Observe the wave form in the CRO screen for each step and repair the connections to normal when the observation has been completed.

a. Open one connection of the input filter capacitor in the power supply circuit.

b. Short the filter choke or speaker field.

c. Open one connection of the second filter capacitor in the power supply circuit.

d. Short the control grid of the r-f tube to the filament.

e. Short the control grid of the mixer tube to the filament.

f. Short the control grid of the i-f tube to the filament.

g. Short the control grid of the first audio tube to the filament.

h. Short the control grid of the power amplifier tube to the filament.

17. Turn off apparatus.

B. Analyze a Receiver for Hum:

Procedure:

The A-F Stages

1. Connect the receiver and the CRO to the a-c line.

2. Connect the "vertical" terminals of the CRO to the a-c line, using a 0.5 mfd. capacitor in series with one lead.

3. Set the controls of the CRO so that two cycles of the 60 cycle wave appear on the screen.

4. Remove connections between the "vertical" terminals of the CRO and the a-c line.

5. Connect the output (voice coil winding of the output transformer) of the receiver to the "vertical" terminals of the CRO. See Fig. 8.

6. Advance the vertical amplifier gain control of the CRO to the "maximum" position. If hum voltage caused by the audio system or power supply is present, the wave form of the hum voltage will appear on the screen of the CRO.

7. Adjust CRO for a stationary pattern.

8. Short the plate of the first audio tube to the chassis.

   Note: If the radio uses transformer coupling, short the grid of the power amplifier tube to the chassis.

   If the wave form on the screen flattens out, the hum is induced in the first audio stage; and the following items in Reference EE should be checked: 1, 4, 5, 6, 7, 8, 11, 12, 13, 14, 16, 17, 18, and 20. If the wave form does not flatten out, the hum is induced in the output stage; and the following items in Reference EE should be checked: 1, 2, 3, 12, 16, and 19.

9. Remove short on the plate of the audio tube.

The R-F and I-F Stages:

10. Connect the signal generator to the a-c line and turn it on.

11. Connect the ground of the signal generator to the chassis of the receiver.

12. Connect the "hot" r-f output of the signal generator to the control grid of the r-f amplifier tube (Point 6) through a .0005 mfd. capacitor and shielded test lead.

13. Set the signal generator to the intermediate frequency of the receiver. Modulation switch should be off.

14. Turn the output attenuator of the signal generator to maximum. If hum voltage now appears on the CRO screen, it is induced in the last i-f transformer or i-f amplifier tube. The following items in Reference EE should be checked: 5, 6, 7, 8, 9, 10, 11, 12, 13, 14, 16, 17, and 20.

15. Connect the test prod from the signal generator to the control grid of the mixer tube (Point 4).

16. Set the radio dial and the signal generator to 1400 kc. Any hum wave form now appearing on the CRO screen is due to hum voltage induced in the first i-f transformer or mixer tube. The same items considered in Step 14 should be checked.

17. Connect the test prod from the signal generator to the antenna (Point 1). Any hum wave form now appearing on the CRO screen is due to hum induced in the r-f stage. The same items considered in Step 14 should be checked.

18. Turn off and disconnect apparatus and return it to stock room.

CAUSES AND REMEDIES OF RECEIVER DISTORTION

Distortion in receivers is due to the improper operation of tubes or to defective circuit components. Some of the causes of distortion in a receiver and the respective remedies are listed below.

1. Defective tubes:
   Test tubes, replace those found defective.

2. Unusually low voltages supplied to tubes:
   Check circuit components, rectifier tube and line voltage. Replace defective components or tubes.

3. Improper tubes in sockets:
   Make sure the tubes called for by the manufacturer are used in their respective sockets.

4. Grid bias voltage excessively low or high:
   Check circuit elements for defective components; repair or replace defective ones.

5. Leaky coupling capacitors in a-f circuits:
   Replace leaky capacitors.

6. Grid and plate resistors excessively low or high in value:
   Replace defective resistors.

7. Open, shorted, mis-matched, or poorly designed audio transformers:
   Replace transformer with one of proper design and good quality.

8. Improper tuning of receiver:
   Properly tune the receiver.

9. Overloading of the a-f amplifier due to excessive signal voltage:
   Reduce volume level, resulting in operation within the rated undistorted output of the receiver.

10. Overloading of the demodulator stage due to excessive signal voltage:
    Reduce strength of signal in r-f stages by reducing volume control if it is in the r-f stage; if volume control is in the a-f section, check the AVC system.

11. Defective speaker:
    Repair or replace speaker.

12. Defective alignment of i-f transformers:
    Align trimmers on the i-f transformers.

13. Leaky AVC by-pass capacitors:
    Replace capacitors.

14. Open AVC filter resistors:
    Replace resistors.

15. Improper filtering of the r-f component following demodulation which allows r-f to get into the audio system:
    Replace defective units of the r-f filter system or make the filter system more effective by using larger values of capacity and inductance or resistance.

16. Improperly designed AVC system which provides insufficient grid bias on r-f tubes with strong signal, thus allowing distortion due to overload of the r-f stages:
    Re-design AVC system.

17. Misalignment of r-f or oscillator circuits:
    Align circuits.

18. Oscillation of a-f, r-f or i-f amplifier circuits:
    Dress wiring, align, replace defective parts.

19. Wrong value coupling capacitors:
    Replace with correct values.

20. Fading and distortion of signal before it enters the radio:
    This is due to atmospheric conditions. The service man can make no adjustment of the receiver to remedy it. An elaborate installation of several receivers and antennas, known as a dual diversity receiving system, under the operation of a radio engineer, is the method utilized by communication systems.

Part II ANALYZE A RECEIVER FOR HUM AND DISTORTION

C. Analyze a Receiver for Distortion

General Information:

There are two general methods of procedure that can be followed in locating distortion in a receiver, signal tracing and signal injection.

In the signal tracing method a signal generator supplying a modulated r-f signal is connected to the antenna and ground connections (input) of the radio. An oscillograph is connected to successive stages, starting at the input and working toward the output. (Points 1 through 15, Fig. 7.) Any irregularities of wave pattern will indicate the presence of distortion in the stage or unit preceding that point.

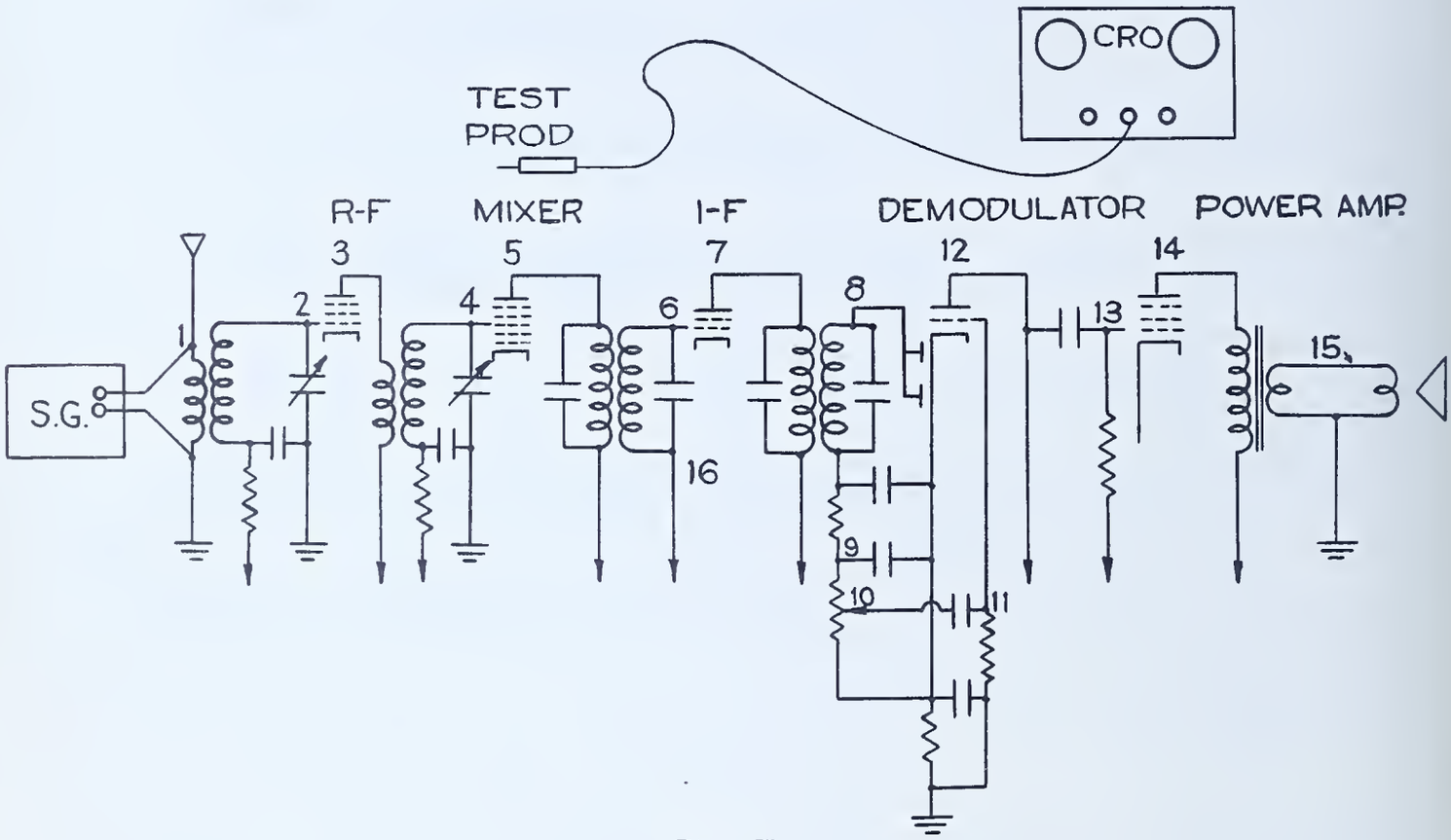

FIG.-7

This method of signal tracing requires, for accurate results, an oscillograph of special design such as the "vidolyzer". The usual oscillograph is not designed to be used for this sort of analysis.

In the signal injection method the oscillograph is connected to the output of the radio (across the speaker voice coil) while the signal generator is moved from stage to stage, starting at the output and working toward the input. At the point where irregularities of wave shape occur, distortion is indicated in the stage or unit following the point where the signal generator is connected. See Fig. 8. Since any oscillograph may be used in the signal injection method, that method is used in this job.

Specifications:

A. Test for distortion in a superheterodyne receiver, using the signal injection method.

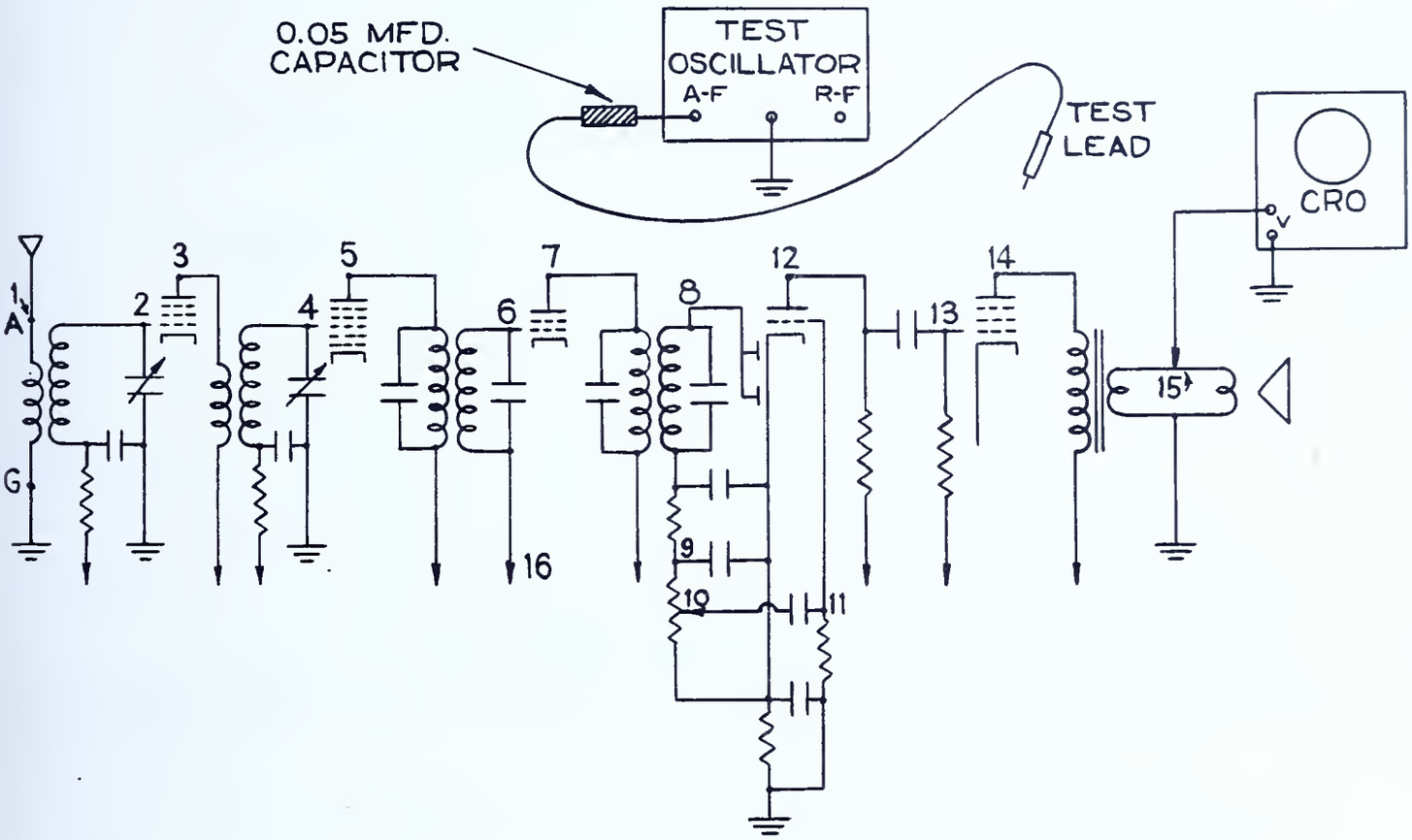

FIG.-8

Tools needed:

1. Screw driver
2. Diagonal cutting pliers
3. Long nose pliers
4. Soldering iron

Materials needed:

1. Hook-up wire, 6 ft.
2. .05 mfd. capacitor
3. .0005 mfd. capacitor
4. Test leads (2 sets)
5. Shielded test lead
6. 1- Fahnestock clip
7. 1- 1 megohm resistor
8. Friction tape

Equipment needed:

1. Cathode ray oscillograph
2. Signal generator
3. Superheterodyne receiver

Procedure:

1. Remove chassis and speaker of radio from cabinet if necessary. Do not disconnect speaker from the radio.

2. Position the chassis so that connection can be made to the circuit as indicated by numbers in Fig. 8.

The A-F Section

3. Connect the audio output of signal generator to "vertical" terminals of CRO.

4. Connect the signal generator and CRO to a-c line and turn on.

5. Set audio output of signal generator to 400 cycles.

6. Adjust CRO for two cycles of the wave form. Sketch pattern of wave form.

7. Remove connections between the audio oscillator and the "vertical" terminals of CRO.

8. Connect output of radio (voice coil winding of output transformer) to the "vertical" terminals of the CRO.

9. Connect a lead from the chassis or ground of the signal generator to the chassis of the radio.

10. Connect a shielded lead through a 0.5 mfd. capacitor to the "hot" a-f output terminal (often colored red) of the signal generator. See Fig. 9.

11. Ground the shield of the test lead to the chassis of the radio or signal generator.

12. Connect the test prod to plate of output tube (Point 14). Refer to Fig. 8 for test points.

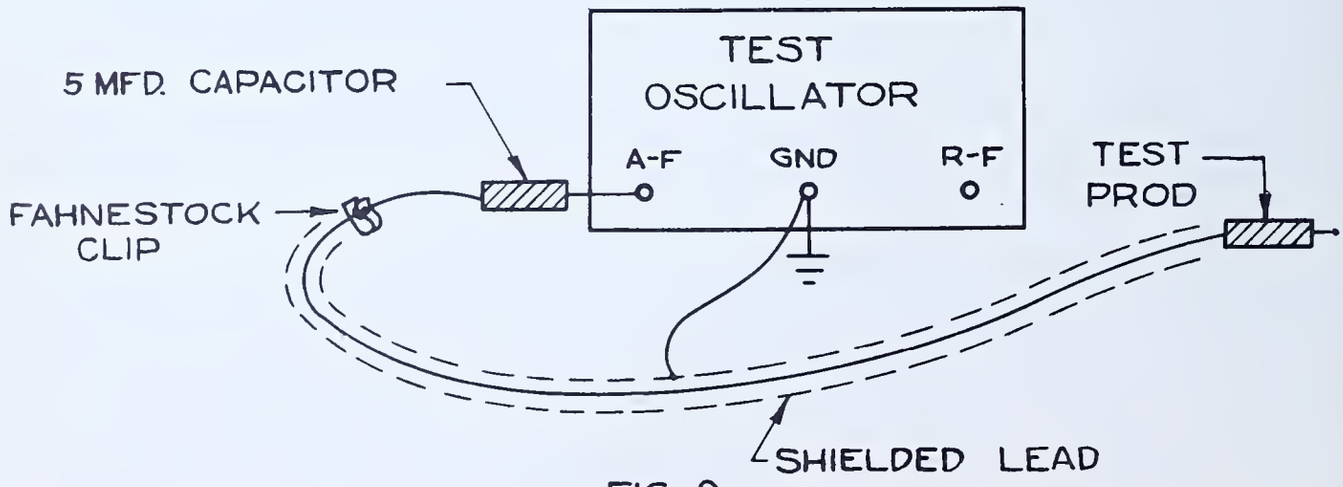

FIG.-9

13. Adjust controls of the CRO for a two cycle pattern of the a-f voltage. Any difference between this pattern and the two cycle pattern obtained in Step 6 indicates distortion due to the output transformer.

    Caution: The height of the pattern on the screen of the CRO should be kept constant throughout the procedure of testing for distortion. Use the vertical amplifier gain control to obtain this constant height unless otherwise instructed.

14. Connect the test prod to grid of output tube (Point 13).

15. Reduce vertical amplifier gain control on the CRO to keep the size of the wave form pattern constant.

    Any variation in symmetry of pattern illustrates distortion in the output stage.

16. Connect the test prod to plate of the first audio amplifier (Point 12).

    Any variation in wave form pattern now illustrates distortion due to the coupling capacitor.

17. Shunt a one megohm resistor across the coupling capacitor (from Point 12 to Point 13).

    Notice the effect on the wave form pattern caused by leakage through the resistor which duplicates the effect of a leaky capacitor.

18. Turn receiver volume control to maximum.

19. Connect the test prod to grid of first audio amplifier (Point 11). Whenever necessary adjust the vertical amplifier gain control of the CRO to keep the size of the wave form pattern constant. Notice the symmetry of wave form pattern.

    Any change in symmetry now illustrates distortion in the first audio amplifier stage.

20. Connect test prod to arm of volume control (Point 10).

    Any change in symmetry of pattern now illustrates a defective capacitor between Points 10 and 11.

    This concludes the testing of the a-f section of the receiver.

The I-F Section

21. Set the signal generator as follows:

    a. Range switch and dial for the intermediate frequency of the radio.

    b. Modulation switch to "internal" - 400 cycles.

22. Replace the 0.5 mfd. capacitor in the signal generator test lead with a .0005 mfd. capacitor.

23. Remove the shielded test lead connection from the a-f output of the signal generator.

24. Connect the shielded test lead to the r-f output of the signal generator.

25. Connect the test prod to the plate of the i-f tube (Point 7).

26. Adjust the dial of the signal generator until a wave form pattern of maximum height appears on the screen of the CRO.

27. Turn the vertical amplifier gain control to maximum and adjust the output attenuator of the signal generator to keep the height of the wave form pattern constant. The symmetry of the wave form pattern should now be the same as in Step 20.

    Any change in pattern indicates distortion in the demodulator stage.

28. Connect the test prod to the plate of the mixer tube (Point 5). Reduce the output attenuator of the signal generator to keep pattern at constant height. Notice symmetry of wave form pattern.

    Any change in symmetry of pattern indicates distortion in the first i-f amplifier stage.

29. Connect test prod to the grid of the mixer tube (Point 4). Any change in symmetry of pattern indicates distortion from the mixer tube.

The R-F Section:

30. Connect the test prod to the plate of the r-f tube (Point 3).

31. Set the signal generator to 1400 kc.

32. Adjust the dial of the radio to 1400 kc. so that a wave form pattern of maximum height is obtained on the screen of the CRO.

33. Retard the output attenuator of the signal generator to keep the height of the pattern at normal level.

    Any change in symmetry of the pattern indicates distortion from mixer stage.

34. Connect the test prod to the antenna (Point 1).

35. Retard the output attenuator of the signal generator to keep the pattern height constant.

    Any difference in symmetry of pattern obtained in this step from that of previous step indicates distortion in the r-f stage.

    This concludes the stage by stage checking of the radio by signal injection.

Effect on the Wave Form of Circuit Disturbance or Overload

36. Adjust the output attenuator of the signal generator to maximum.

37. Reduce the vertical amplifier gain control of the CRO to keep the wave form pattern at normal height. Notice if the wave form pattern has the same symmetry as in Step 35.

    Any change in symmetry indicates distortion in the r-f stages due to overload.

38. Short out the AVC voltage by connecting a wire from the grid return of the i-f amplifier tube (Point 16) to the chassis. Notice any change of symmetry in pattern on the screen of the CRO which indicates distortion in the r-f stage due to overload.

39. Remove the short from the AVC circuit.

40. Short the cathode resistor on the first audio amplifier tube.

    A change in pattern in the CRO indicates distortion from the first audio stage.

41. Remove the short from the cathode resistor.

42. Short (momentarily only) the cathode resistor of the output tube. Notice change in symmetry of the pattern on the screen of the CRO. This indicates distortion in the output stage.

43. Remove the short from the output tube cathode resistor.

44. Open the grid circuit of the first audio tube. Notice pattern in CRO indicating distortion caused by this stage. Repair the circuit.

45. Open the grid circuit of the last audio tube. Notice pattern in the CRO indicating distortion in this stage. Repair the circuit.

QUESTIONS

Place the answers to these questions in your notebook or on form as directed by instructor.

1. What is the advantage of using the cathode ray oscillograph for alignment?
2. What does the CRO indicate in addition to the amplitude of an a-c voltage?
3. What type of test oscillator is used with the CRO for receiver alignment?
4. What is a "wobbler"?
5. What is the purpose of the synchronizing impulses from the test oscillator or "wobbler"?
6. Are voltages of different frequencies amplified evenly through a tuned transformer? Why?
7. Explain how the test oscillator operates in conjunction with the CRO to give a resonance curve.
8. What is the advantage of sharply tuned circuits?
9. What is the advantage of broadly tuned circuits?
10. What is the advantage of a "flat top" selectivity curve?
11. Which trimmers were first adjusted in aligning the superheterodyne? Which next?
12. What type modulation was used for the preliminary alignment of the trimmers? Why?
13. What is meant by the term "sweep frequency"?
14. What was the band width of the "flat top" curve obtained in this job?
15. What sweep or band width was supplied by the test oscillator?
16. List twenty causes of distortion in a receiver.
17. Check those causes that were artificially introduced in section A of Part II.
18. Name two general procedures of finding distortion by use of a signal generator and oscillograph.
19. Describe briefly how each of these two methods was accomplished.
20. Which procedure was used in this job? Why?
21. List twenty causes of hum in a receiver.
22. Check those causes that were artificially introduced in section B of Part II.
23. Why is hum more often found in a-c receivers than in battery operated receivers?

Reference:

Everitt, W. L. et al., Fundamentals of Radio, pp. 140-144.

UNIT 14

CIRCUIT ANALYSIS BY VOLTAGE, RESISTANCE, AND CURRENT MEASUREMENTS

Reference GG — Theory of Circuit Analysis. Page 266

JOB SHEET 14 — MAKE A VOLTAGE, RESISTANCE, AND CURRENT ANALYSIS OF THE CIRCUITS OF A SUPERHETERODYNE RECEIVER. Page 272

A. Voltage Analysis. Page 273

B. Resistance Analysis. Page 277

C. Current Analysis. Page 281

THEORY OF CIRCUIT ANALYSIS

General Information:

In order to locate faults in the various circuits of radio apparatus the repair man will find it advantageous to measure the voltage, current, and resistance values existing within a particular circuit.

However, merely securing readings is not enough to locate the defective parts in a circuit. The repairman must make a comparison of readings at various points in a circuit to the values specified for those points. The specified values are found on a schematic diagram which is usually supplied by the manufacturer. If such a diagram is not available, the repairman must rely on comparison with similar circuits encountered in his past experiences. This process of measurement and comparison is known as circuit analysis.

This reference sheet describes a typical voltage, resistance, and current analysis of one circuit of a superheterodyne receiver. Current measurements are seldom necessary, since, by application of Ohm's Law, current values may be calculated from the measured resistance and voltage values.

A. Voltage Analysis

The circuits of radio equipment, which consist of many components, are designed to supply the correct values of voltage to the elements of the tubes. The value of the voltage supplied is determined by the function the tube must perform. In a receiver, that function might be:

(1) Radio frequency or intermediate frequency amplifier
(2) Oscillator
(3) Demodulator
(4) Audio amplifier
(5) Rectifier

The process of performing a voltage analysis of a particular circuit is shown here by a consideration of the plate circuit of the triode a-f amplifier section of a 6Q7 type tube shown in Fig. 1. This illustrates a typical analysis and may be applied to other circuits according to their schematic diagrams.

Inspection of Fig. 1 shows that current is supplied to the plate of the 6Q7 from the rectifier filament through the several parts of the circuit in the following order: Starting at the rectifier filament, the path is through the filter choke, then through the plate decoupling resistor R_{14} and the plate load resistor R_{13} to the plate terminal of the tube. The return path for the current is through the tube and the cathode resistor R_{11} to ground.

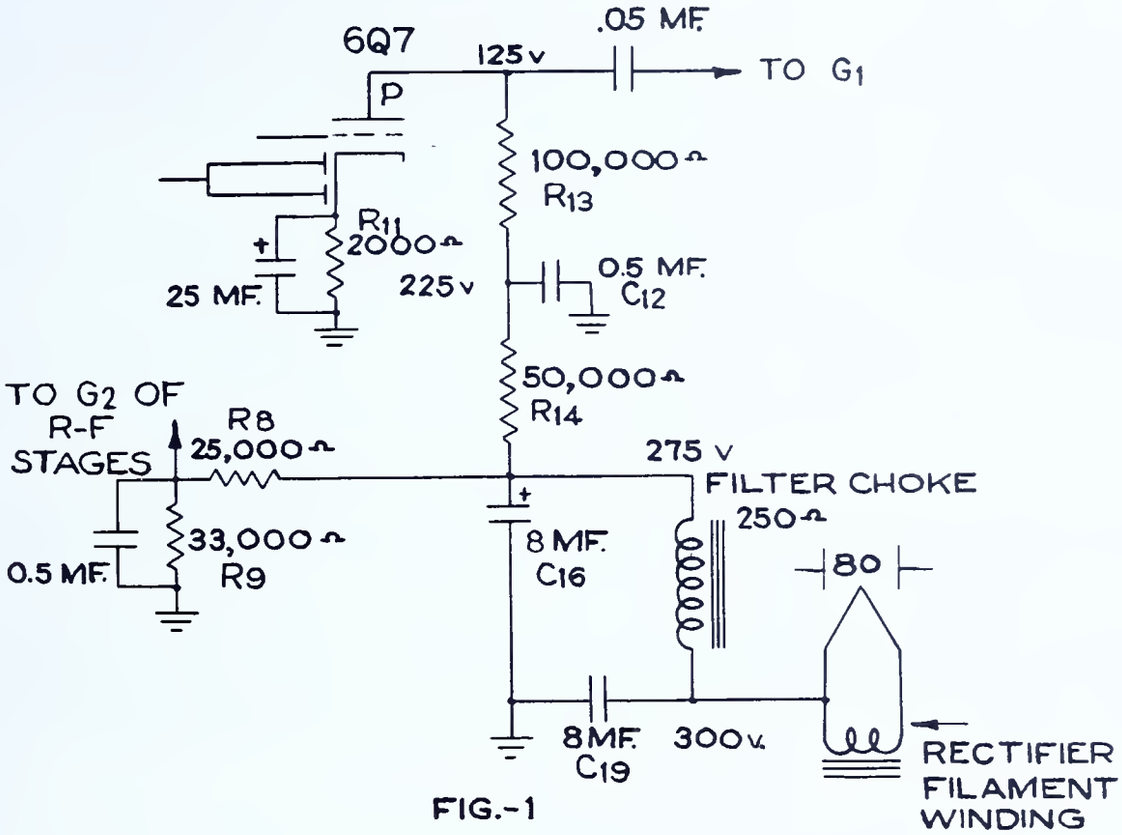

FIG.-1

Along this path various voltage drops will occur. Voltages are measured in any circuit at the input side and the output side of each element of the circuit. The test prods of the instrument are placed on those points across which the voltage is to be measured. In Fig. 1 the voltage drop from rectifier filament to ground is 300 volts. This point (rectifier filament) is also the input to the filter choke. The voltage reading from ground to output of the filter choke is 275 volts. The voltage drop across the filter choke is, therefore, the difference between output and input readings or 25 volts. A direct voltage reading across this choke should be 25 volts. It it is not, there is an error in resistance, current, or input voltage. The voltage reading from ground to the junction of R_{13} and R_{14} in Fig. 1 is 225 volts, indicating a drop in voltage across R_{14} of 50 volts. The next reading is from ground to the plate terminal of the tube and is 125 volts, indicating a drop of 100 volts across R_{13}. The voltage drop along the circuit is 300 volts minus 125 volts or 175 volts. This total drop is equal to the sum of the drops through each element of the circuit. Voltage drops between any two points are equal to the product of the resistance between those points and the current flowing through that resistance ($E = I \times R$).

For example: In Fig. 1 the 6Q7 tube normally draws a plate current of 1 ma. This current flows through resistors R_{14} and R_{13}, causing voltage drops to occur in the following order: From the positive terminal of C_{16} to ground a reading of 275 volts is obtained. The voltage drop across R_{14} is equal to 50,000 ohms times .001 amperes or 50 volts. Subtracting this value from the 275 volts will give 225 volts, which will be the normal voltage to ground present at the junction of R_{14} and R_{13}. The plate current of the 6Q7 causes another voltage drop equal to 100,000 ohms times .001 amperes or 100 volts across R_{13}. Subtracting this voltage drop from the 225 volts appearing at the junction of R_{14} and R_{13} gives a value of 125 volts, which is the voltage to ground present at the plate terminal of the tube. From this it is obvious that any errors in the voltage supplied, resistance of the circuit, or current flowing, will be indicated by an incorrect voltage reading at the plate of the 6Q7 tube.

Measuring the voltage between the plate and ground will give a value equal to the difference between the voltage measured from the rectifier filament to ground and the sum of the several voltage drops along the circuit. In Fig. 1 this voltage is 125 volts, which is an average value for circuits of this type and is sufficiently accurate for explanation of this analysis; the working value for a specific case would be found marked on the particular schematic diagram. Most schematic diagrams specify the sensitivity of the instrument to be used in making measurements. This assures measurement to a common standard. If an instrument of other than the specified sensitivity is used the readings obtained will not all conform to those listed by the manufacturer, causing mis-interpretation of characteristics, unless proper allowance is made for the variation in sensitivity.

Normal circuit conditions would result in a voltmeter reading of 125 volts when taken between the plate terminal and ground. If no voltage is indicated, there must be some error present along the circuit. To isolate the cause of the trouble, measure the voltage between the junction of R_{13} and R_{14} and ground. If a voltage reading higher than that expected at the plate terminal is indicated, the fault lies between the point of measurement and the plate of the tube. Inspection of the schematic shows that resistor R_{13} must be open or grounded at the end connected to the plate of the tube, since these are the two conditions which could prevent voltage from reaching that point.

If when measuring at the junction of R_{13} and R_{14} no voltage to ground is indicated, consult the schematic (Fig. 1) to see what items between that point and the rectifier filament might be the cause of no voltage appearing there. From inspection it is apparent that a short circuit through capacitor C_{12} to ground or an open resistor R_{14} would prevent the voltage from reaching the junction of R_{13} and R_{14}. To determine which is the case, capacitor C_{12} must be disconnected from the circuit to eliminate the possibility of a short circuit through it to ground, and the voltage to ground should again be measured at the junction of R_{13} and R_{14}. If no voltage to ground is present after C_{12} is removed, R_{14} is open and C_{12} may or may not be short circuited; it may have been a short circuit through C_{12} that caused R_{14} to become burned-out and thus open.

The voltage between the positive terminal of C_{16} and ground will indicate whether voltage is being supplied to R_{14}. No voltage at this point will indicate a short circuit to ground through C_{16} or an open filter choke. To determine which is the case, measure the voltage from the rectifier filament to ground.

(1) If this is quite low (25 to 30 volts), capacitor C_{16} is short circuited.
(2) If it is higher than normal, the filter choke is open, causing the voltage across C_{19} to rise to approximately the peak value of the rectifier output.
(3) If the reading is zero, the input filter capacitor C_{19} is shorted or the rectifier is not functioning properly.

This discussion of voltage analysis provides the process of determining faulty parts. Application of Ohm's Law principles and comparison of the meter readings to indicated schematic values are part of the process. This basic process may be applied to any of the individual or combined circuits of a unit of radio equipment to analyze existing conditions with respect to those required for correct operation.

B. Resistance Analysis

The various circuits of a piece of radio apparatus may be considered as groups of resistances connected in series, parallel, or as a combination of series and parallel. The conditions for proper operation of these circuits are determined to a large degree by the existence of correct values of resistance between various points in the particular circuit under consideration. To locate faults which may exist in a circuit, comparison of existing values to specified values must be made. This process is known as resistance analysis. As an example, consider the plate circuit of the 6Q7 amplifier shown in Fig. 2.

Note: It is possible that the values measured may deviate from the specified circuit values or the RMA color code values marked on the resistors by as much as twenty per cent. This may be entirely due to the tolerance variations of the resistors and ohmmeter inaccuracy and should not be construed immediately as a circuit failure.

The resistance existing between the plate terminal P of the 6Q7 and ground under normal conditions is the sum of resistors R_{13}, R_{14}, R_8, and R_9, in this case equal to 208,000 ohms.

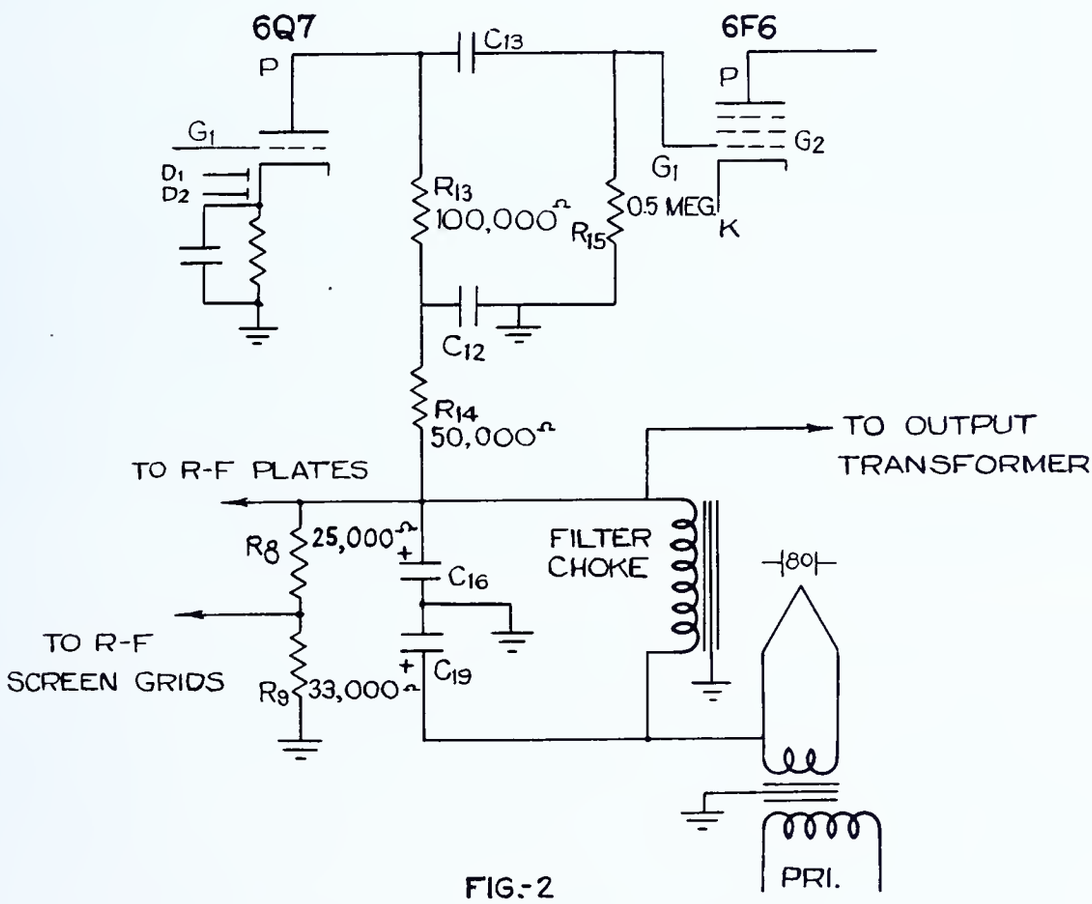

FIG.-2

If the normal value of 208,000 ohms does not appear when measuring from the 6Q7 plate to ground, it is obvious that some part or parts along the path to ground are faulty. This may be through C_{13} or through R_{13}. Disconnect C_{13} and check it for leak or short. If C_{13} is good, the fault is in the R_{13} circuit. To find the fault make a measurement to ground from the junction of R_{13} and R_{14}. Inspection of the schematic diagram shows that from the junction of R_{13} and R_{14}

to ground a resistance value of 108,000 ohms will be indicated under normal conditions. If, upon measuring that resistance the normal value is indicated, it is obvious that the fault must lie between this junction point and the plate of the 6Q7, thus indicating R_{13} to be faulty.

A short circuit reading from the junction of R_{13} and R_{14} to ground would indicate C_{12} to be faulty since the presence of a short circuit in C_{12} would provide a low resistance path to ground at this point. An open circuit reading from this point to ground indicates an open circuit along the path through R_{14}, R_8, and R_9. In order to determine which of the resistors (R_{14}, R_8, or R_9) is at fault, it is necessary to measure the resistance appearing between ground and the junction of R_8, R_{14}, C_{16} and the filter choke. If a reading of 58,000 ohms is obtained at this point, R_{14} is open. If an open circuit is found at this R_8, R_{14}, C_{16} etc. junction, R_8 or R_9 is open and each must be checked. If a short circuit, or lower than normal resistance value (58,000 ohms) is measured at this point, there are seven possible paths through which a circuit to ground must be checked.

(1) R_8 and R_9
(2) C_{16}
(3) The filter choke and C_{19}
(4) The filter choke insulation
(5) The filter choke windings and the power transformer insulation
(6) The circuit to the r-f tube plates
(7) The circuit to the r-f tube screen grids

To isolate the cause of failure in a case such as this, it is necessary to disconnect the several possible paths from each other and measure the resistance of each one to ground separately. The measured value of resistance may then be compared to schematic values in order to locate the faulty part.

The process given here is a typical resistance analysis; a similar procedure may be applied to any of the various circuits of a unit of radio equipment in order to analyze the conditions of resistance there.

C. Circuit Analysis by Current Measurements

In radio equipment, numerous circuits are found which are formed by the connection of several branch circuits. This connection forms complex series-parallel networks. For example, the circuits supplying power to the plates and to the screen grids of the various tubes and to the voltage divider form a series-parallel network. The measurement of current in the various branches of the network and the application of Kirchhoff's Law (for current) often proves helpful in the analysis of a complex circuit.

It should be remembered, that in measuring current values, the resistance and voltage conditions must be approximately correct beforehand or serious damage to the milliammeter will result. As an example, to measure the current in a circuit having a shorted by-pass capacitor would be dangerous, since very high current, which would damage the instrument, may be present on the power supply side of the capacitor. In any case the highest range of the milliammeter should be used first, reducing to lower ranges as necessary to secure an accurate reading.

A current analysis is not usually made, since practically all troubles can be located by means of resistance and voltage analysis. To make a current analysis it is necessary to open circuits within the radio in order to connect the milliammeter in series with the circuit. The presence of short circuits either in the receiver or because of contact of the instrument prods to ground will result in damage to the instrument.

However, current analysis is often helpful in narrowing down the causes of incorrect circuit conditions resulting from variations in the tolerance ratings of resistances. These variations otherwise might not be noticed in a resistance or voltage analysis because of the cancelling effect of positive and negative tolerance errors.

For example, a typical analysis of the current conditions in the circuit shown in Fig. 2 may be considered.

The plate of the 6Q7 tube draws a current of 1 ma. This current flows through resistors R_{13} and R_{14} and through the filter choke. Placing the milliammeter in series with the lead from R_{13} to the plate of the tube will show a reading of 1 ma. Similarly at the junction of R_{13} and R_{14}, and also at the power supply end of R_{14} the instrument will indicate 1 ma. However, in series with the filter choke a larger value of current will be indicated, since the current taken by the bleeder and the plate and screen grid circuits of the remaining tubes also flows through the choke, and the value of current through the choke should equal the sum of the currents taken by each of the individual branches. These are the plate of the 6Q7, the plates and screen grids of the other tubes, and the bleeder. A discrepancy between the sum of the currents taken by the individual branches and the total current through the choke will indicate a fault in one of these circuits.

MAKE A VOLTAGE, RESISTANCE, AND CURRENT ANALYSIS OF THE CIRCUITS OF A SUPERHETERODYNE RECEIVER

General Information:

In this job a voltage, resistance, and current analysis of the various circuits of the superheterodyne receiver constructed in Job 11 is to be made. In order that the effect of circuit failures may be better understood, certain specified errors are introduced and the effects on voltage and resistance readings noted.

Specifications:

1. Part A. Make a voltage analysis of the superheterodyne receiver constructed in Job 11. Use a 1000 ohm per volt multimeter for measurements.
2. Make circuit failures in the receiver to determine the effect on the voltage analysis.
3. Part B. Make a resistance analysis of the superheterodyne receiver.
4. Make circuit failures in the receiver to determine the effect on the resistance analysis.
5. Part C. Make a current analysis of the superheterodyne receiver.
6. Tabulate all readings in notebook on a copy of forms found on Question Sheet.
7. Make a schematic diagram of the receiver and tabulate voltage and resistance values on the diagram as specified in procedure.

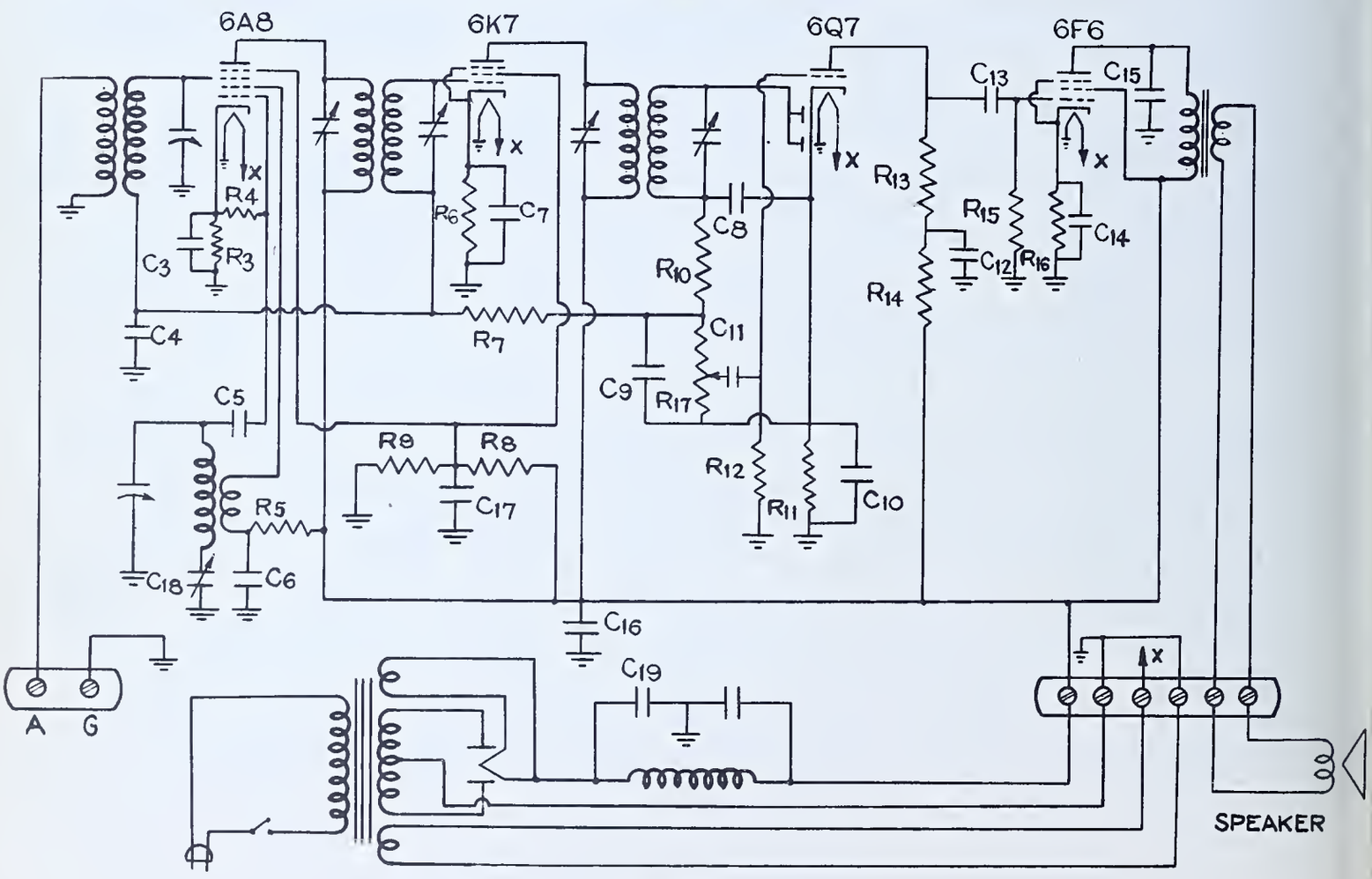

FIG.-3

Tools needed:

1. Long nose pliers
2. Soldering iron
3. Screw driver
4. Diagonal cutting pliers

Equipment needed:

1. Superheterodyne receiver as constructed in Job 11
2. Power supply
3. Multimeter, 1000 ohms per volt

Materials needed:

1. Hook-up wire
2. 0.5 megohm resistor
3. Test leads

A. Voltage Analysis

Procedure:

1. Make a large copy of schematic diagram Fig. 3.

2. Examine receiver to identify tube types and functions.

3. Install proper tubes in sockets.

4. Connect receiver to power supply to secure the necessary operating voltages.

5. Position receiver and power supply chassis so that wiring and soldered connections are exposed.

6. Disconnect bleeder resistor in power supply. The receiver has its own voltage divider resistors.

7. Connect power supply line cord to suitable a-c outlet and turn on unit.

Power Supply Voltage Analysis

8. Measure the voltage across the following circuits and record the value obtained on the copy of the schematic diagram at the point where each measurement is taken.

Note: Use multimeter for measurements. Readings a, b, c, d, e, and f are made with the a-c voltmeter. Other readings are d-c. Caution: High voltages are dangerous.

a. Primary of power transformer. This should indicate the line voltage.
b. One plate of rectifier to chassis.
c. Second plate of rectifier to chassis.
d. One plate of rectifier to the other plate.
   Readings "b" plus "c" should equal reading "d".
e. Filament of rectifier tube.
f. 6.3 volt filament winding of power transformer.
g. Filament of rectifier tube to chassis.
h. Across filter choke.
i. B+ to chassis.

Receiver Voltage Analysis

9. Measure the voltage between the following points and record on the schematic.

   a. B+ to chassis.
   b. Plate of 6F6 to chassis.
   c. Across primary of output transformer.

      Note: Reading obtained in Step "a" minus reading "b" should equal reading "c".

   d. Cathode of 6F6 to chassis.
   e. Suppressor grid of 6F6 to chassis.
   f. Control grid of 6F6 to chassis. No reading should be obtained in this step. A reading indicates a leaky coupling capacitor or defective 6F6.
   g. Triode plate of 6Q7 to chassis. Since a high resistance is included in this circuit, the current drawn by the meter will cause an increased voltage drop across the resistance. This results in a lower than normal voltage at this point.
   h. Across capacitor C_{12}. See Fig. 3.
   i. Cathode of 6Q7 tube to chassis.
   j. Grid of 6Q7 tube to chassis.
   k. Diode of 6Q7 tube to chassis.
   l. Plate of 6K7 to chassis.
   m. Screen grid of 6K7 to chassis.
   n. Cathode of 6K7 to chassis.
   o. Control grid of 6K7 to chassis.
   p. Plate of 6A8 to chassis.
   q. Screen grid (G_4) of 6A8 to chassis.
   r. Control grid (G_3) of 6A8 to chassis.
   s. Oscillator plate (G_2) of 6A8 to chassis.
   t. Oscillator grid (G_1) of 6A8 to cathode.
   u. Cathode of 6A8 to chassis.

10. Turn off receiver.

Circuit Failure Tests

11. Make the following circuit failures. For each failure, measure the voltage from each tube element of the indicated stage to chassis. Tabulate results in notebook, recording the failure injected and the reading secured, using for each stage a copy of the form illustrated in Fig. 4. In each form provide as many lines and columns as required for the stage measured. Print on each line the step performed rather than merely its number.

Caution: Turn off receiver before making changes in the circuit. Make and repair one failure at a time.

STAGE

OPERATION			TUBE ELEMENT				
(1)							
(2)							
(3)							
(4)							

FIG.-4

a. Output Stage (6F6)

(1) Open the output transformer primary.
(2) Open the cathode bias resistor.
(3) Open the grid resistor.
(4) Shunt a 0.5 megohm resistor across the coupling capacitor.
(5) Short circuit the filter choke.
(6) Short circuit* the screen grid to chassis.
(7) Short circuit* the plate to chassis.

OUTPUT STAGE - 6F6				
OPERATION	PLATE	G_1	G_2	K
(1) OPEN OUTPUT TRANS. PRI.	USE THESE COLUMN HEADINGS			
(2) OPEN CATHODE BIAS RESISTOR	PROVIDE SEVEN LINES			
(3)				

*Caution: Do not permit the shorts in Steps (6) and (7) to remain longer than necessary to take readings.

b. Demodulator First Audio Stage (6Q7)

(1) Open the plate resistor.
(2) Open the cathode resistor.
(3) Open the grid resistor.
(4) Short by-pass capacitor C_{12}.
(5) Short the cathode resistor.
(6) Short the volume control.
(7) Short capacitor C_{12}.
(8) Short resistor R_{14}.

DEMODULATOR STAGE - 6Q7				
OPERATION	PLATE	DIODE	G_1	K CATHODE
(1)	USE THESE COLUMN HEADINGS			
(2)	PROVIDE EIGHT LINES			

c. Intermediate Stage (6K7)

(1) Open the cathode resistor.
(2) Open voltage divider resistor R_8.
(3) Open resistor R_9.
(4) Short screen grid capacitor C_{17}.
(5) Short cathode resistor.
(6) Short the plate to chassis.
(7) Short AVC capacitor C_4.

I-F STAGE 6K7				
OPERATION	PLATE	G_1	G_2	K CATHODE
(1)	USE THESE COLUMN HEADINGS			
(2)	PROVIDE SEVEN LINES			

d. Oscillator-Mixer Tube (6A8)

(1) Open grid resistor R_4.
(2) Open cathode resistor R_3.
(3) Open AVC resistor R_7.
(4) Open oscillator plate resistor R_5.
(5) Short oscillator plate capacitor C_6.
(6) Short screen grid to chassis.
(7) Short cathode to chassis.
(8) Short grid resistor R_4.

	MIXER STAGE - 6A8					
OPERATION	PLATE	G_1	G_2	G_3	G_4	K CATHODE
(1)	USE THESE COLUMN HEADINGS					
(2)	PROVIDE EIGHT LINES					

12. Check the voltage measurements taken in Step 11 against those indicated on the schematic diagram prepared in Step 9. Notice how the various circuit failures caused changes in voltage at the tube terminals.

B. Resistance Analysis

Note: Usually the manufacturer's schematic provides the "specified" resistance values of each part. Since for this job the resistance values are not definitely known, they must be obtained by measurement of a receiver in good condition and entered as "specified" values for that set.

The process of obtaining such measurements is a part of the resistance analysis performed in trouble shooting, except that the values obtained in trouble shooting are compared to the specified values to note any deviations.

In trouble shooting practice, where speed of repair is necessary, a resistance analysis is usually made only of that circuit where trouble is detected.

Procedure:

1. Disconnect the power supply from the a-c line.

Coil Windings

2. Measure the resistance of the coils in the receiver according to the following instructions and record the values on the schematic diagram beside the part measured:

   a. Primary of antenna coil:- measure between antenna and chassis.
   b. Secondary of antenna coil:- measure between 6A8 grid clip and grid return.
   c. Primary of oscillator coil:- measure L_4 (see Fig. 3).
   d. Secondary of oscillator coil:- measure across L_3.
   e. Primary of IFT_1:- measure between 6A8 plate and B+ .
   f. Secondary of IFT_1:- measure between control grid of 6K7 and grid return.
   g. Primary of IFT_2:- measure between plate of 6K7 and B+.
   h. Secondary of IFT_2:- measure between diode plate of 6Q7 and diode return.
   i. Primary of output transformer:- measure between plate of 6F6 and B+.
   j. Secondary of output transformer:- measure at output terminal strip. Disconnect the speaker to make this measurement.

Resistors

3. Measure the resistance of each resistor in the receiver and record on the schematic next to the symbol of the part measured.

Power Supply

4. Measure the resistance of the elements of the power supply according to the following steps. Record results on schematic.

   a. Plate #1 of the rectifier tube to chassis.
   b. Plate #2 of the rectifier tube to chassis.
   c. Plate #1 of the rectifier to plate #2.
   d. Filament of the rectifier to chassis.

   Caution: In taking resistance readings across electrolytic capacitors, connect the positive lead from the ohmmeter to the positive section of the capacitor. If this precaution is not observed, an inaccurate reading will be obtained.

   e. B+ to chassis.
   f. Filament of rectifier to B+ .
   g. Across the terminals of the a-c plug.

   Note: Power switch must be "on"

   h. Across the filament of the rectifier tube.
   i. Across the 6.3 volt filament winding.

Identification of Circuits

5. Prepare a chart in notebook similar to form 2 on Question Sheet.

6. Identify from the schematic diagram the circuit (coil winding and resistors) between each tube element and the chassis. Enter in column 3, form 2, the letter designations of these units in each circuit. See example on line "1" of this form.

7. Enter in column 4 of this form the resistance value as indicated by the schematic diagram for each resistor and coil winding which is listed in column 3, labeling in a corner of the respective blocks in column 4 the letter designations of the value entered there.

8. Add these resistance values within each circuit (column 4) and enter the total in column 5. These totals provide the "specified" values of the respective circuits for comparison with the reading to be taken in Step 9 and entered in column 6.

Receiver Tube Terminals

9. Measure the resistance from each socket contact (tube element) to chassis. Tabulate results in column 6 of the copy of chart for each of the following steps:

   a. 6A8 plate to chassis.
   b. 6A8 G_1 to chassis.
   c. 6A8 G_2 to chassis.
   d. 6A8 G_3 to chassis.
   e. 6A8 G_4 to chassis.
   f. 6A8 cathode to chassis.
   g. 6K7 plate to chassis.

h. 6K7 G_1 to chassis.
i. 6K7 G_2 to chassis.
j. 6K7 G_3 to chassis.
k. 6K7 cathode to chassis.
l. 6Q7 diode plate to chassis.
m. 6Q7 grid to chassis.
n. 6Q7 triode plate to chassis.
o. 6Q7 cathode to chassis.
p. 6F6 plate to chassis.
q. 6F6 G_1 to chassis.
r. 6F6 G_2 to chassis.
s. 6F6 G_3 to chassis.
t. 6F6 cathode to chassis.
u. 80 filament to chassis.

10. Compare the resistance values in column 6 with those calculated and entered in column 5. These values should be the same in this job. In practical resistance analysis, however, they may deviate. If these values vary appreciably, check the individual circuit by the method discussed for resistance analysis, Reference GG.

Circuit Failure Tests

11. Make the following circuit failures. For each failure, measure the resistance from each tube element to chassis and tabulate readings in notebook, recording the failure injected. Use form similar to Fig. 4, providing as many lines and columns as required.

a. Output Stage (6F6)

(1) Open the output transformer primary.
(2) Open the cathode bias resistor.
(3) Open the grid resistor.
(4) Short the B+ to chassis.
(5) Short the plate to chassis.
(6) Short the coupling capacitor.
(7) Short the cathode to chassis.

OUTPUT STAGE - 6F6				
OPERATION	PLATE	G_1	G_2	K
(1)	USE THESE COLUMN HEADINGS			
(2)	PROVIDE SEVEN LINES			

b. Demodulator First Audio Stage (6Q7)

(1) Open the plate resistor.
(2) Open the volume control.
(3) Open the cathode resistor.
(4) Open the grid resistor.
(5) Short the coupling capacitor.
(6) Short the volume control.
(7) Short the grid to cathode.
(8) Short the decoupling capacitor C_{12}.

DEMODULATOR STAGE - 6Q7				
OPERATION	PLATE	DIODE	G_1	K
(1)	USE THESE COLUMN HEADINGS			
(2)	PROVIDE EIGHT LINES			

c. I-F Amplifier Stage (6K7)

(1) Open the i-f output transformer primary.
(2) Open the AVC time delay resistor R_7.
(3) Open the cathode bias resistor.
(4) Short the B+ to chassis.
(5) Short the screen grid to chassis.
(6) Short AVC time delay capacitor to chassis.
(7) Short the i-f output transformer primary.

I-F STAGE-6K7				
OPERATION	PLATE	G_1	G_2	K
(1)	USE THESE COLUMN HEADINGS			
(2)	PROVIDE SEVEN LINES			

d. Oscillator - Mixer tube (6A8)

(1) Open the i-f input transformer primary.
(2) Open the oscillator grid resistor.
(3) Open the cathode bias resistor.
(4) Open the voltage divider resistor R_9.
(5) Short the cathode bias resistor.
(6) Short the voltage divider resistor R_8.
(7) Short the oscillator plate return capacitor C_6.
(8) Short the volume control.

	MIXER STAGE-6A8					
OPERATION	PLATE	G_1	G_2	G_3	G_4	K
(1)	USE THESE COLUMN HEADINGS					
(2)	PROVIDE EIGHT LINES					

12. Compare the readings obtained in Step 11 where failures were effected to those taken in Step 9 for normal conditions, column 6, form 2.

C. Current Analysis

Procedure:

Caution: Turn off the receiver before connecting the milliammeter in any circuit. Make sure that there are no short circuits before turning on equipment to make measurements.

1. Connect the milliammeter in the B+ lead between power supply and receiver. (Positive side of milliammeter connects to power supply side of circuit.)

2. Set milliammeter to the 100 ma. scale.

3. Turn on receiver and read meter after receiver has properly warmed up (about one minute). Record reading in notebook (label B+ current).

4. Connect milliammeter in the following circuits, one at a time, and take a reading for each circuit. Record all readings in notebook, label each step.

   Note: The negative side of the meter is always connected to the tube side of the circuit. Allow the receiver to heat for one minute before each reading is taken.

   a. Plate return circuit of 6F6 tube.
   b. Screen grid (G_2) of 6F6 tube.
   c. Plate return circuit of 6Q7 tube.
   d. Plate return circuit of 6K7 tube.
   e. Screen grid circuit (G_2) of 6K7 tube.
   f. Plate return circuit of 6A8 tube.
   g. Screen grid circuit (G_4) of 6A8.
   h. Oscillator plate return circuit (G_2) of 6A8 tube.
   i. Voltage divider circuit (open the chassis side of R_9 and connect the milliammeter between R_9 and chassis for this measurement).

5. Add the currents recorded for the lettered sections of Step 4. The total calculated current should equal the reading made in Step 3. If it does not, the by-pass capacitors should be checked for leakage.

6. Disconnect the equipment and return it to stock room.

QUESTIONS

Place the answers to these questions in your notebook or on form as directed by instructor.

A superheterodyne receiver with the same schematic diagram as Fig. 3 has parts of the following resistance:

R_3 - 300 ohms	R_{16} - 450 ohms
R_4 - 60,000 ohms	R_{17} - 250,000 ohms
R_5 - 20,000 ohms	L_1 - 40 ohms
R_6 - 250 ohms	L_2 - 8 ohms
R_7 - 750,000 ohms	L_3 - 7 ohms
R_9 - 18,000 ohms	L_4 - 2 ohms
R_{10}- 20,000 ohms	IFT_1 primary - 20 ohms
R_{11}- 4,000 ohms	IFT_1 secondary - 20 ohms
R_{12}- 2 megohms	IFT_2 primary - 20 ohms
R_{13}- 200,000 ohms	IFT_2 secondary - 20 ohms
R_{14}- 100,000 ohms	T_1 primary - 450 ohms
R_{15}- 500,000 ohms	T_1 secondary - 1 ohm
	Filter choke - 400 ohms

1. Make a copy of form 1 in notebook.

   Note: The values, "Normal Voltage", listed on the first horizontal line, are for normal conditions with no circuit failures existing.

2. Calculate what the normal resistance should be from each tube element to chassis and record results on that horizontal line of the copy of the tabulation form.

3. For each of the circuit failures listed in column 1, form 1, tabulate the approximate voltage that would be measured between the indicated tube elements and chassis.

4. For each of the circuit failures listed in column 1, form 1, tabulate the approximate resistance that would be measured between the indicated tube elements and chassis.

FORM 1

All Measurements Made to Ground	#6A8						#6K7				#6Q7				#6F6				#80	
	P	G_1	G_2	G_3	G_4	K	P	G_1	G_2	K	P	D	G_1	K	P	G_1	G_2	K	F	
Normal Voltage	269	-3.0	190	-	90	3.0	269	-	90	2.5	85	-	0	1.1	252	0	270	17.0	305	VOLTAGE
Normal Resistance																				
C_{16} shorted																				
C_{17} shorted																				
C_{12} shorted																				
C_6 shorted																				
C_{13} shorted																				
C_4 shorted																				
C_{15} shorted																				
C_{19} shorted																				
R_8 open																				
R_{13} open																				
Primary of T_1 open																				
R_{17} open																				
Filter choke open																				
C_{16} shorted																				RESISTANCE
C_{17} shorted																				
C_{12} shorted																				
C_6 shorted																				
C_{13} shorted																				
C_4 shorted																				
C_{15} shorted																				
C_{19} shorted																				
R_8 open																				
R_{13} open																				
Primary of T_1 open																				
R_{17} open																				
Filter choke open																				

DO NOT WRITE IN THIS CHART

COPY FORM IN NOTEBOOK

FORM 2

Col. 1	2	3	4				5	6
Tube	Tube Element	Circuit to Chassis through	Measured Resistance of Part				Total Resistance of Parts in Column 4	Total Resistance to Chassis
6A8	P	IFT_1, PRI., R_8, R_9	IFT_1 ? Ω	PRI. ? Ω	R_8 ? Ω	R_9 ? Ω		
	G_1							
	G_2							
	G_3							
	G_4							
	K							
6K7	P							
	G_1							
	G_2							
	G_3							
	K							
6Q7	P							
	Diode							
	G_1							
	K							
6F6	P							
	G_1							
	G_2							
	K							
80	Fil							

DO NOT WRITE IN THIS CHART

COPY FORM IN NOTEBOOK

UNIT 15

THE USE OF SIGNAL TRACING EQUIPMENT

Reference HH — Signal Tracing Equipment. Page 286

JOB SHEET 15 — TEST A RADIO WITH SIGNAL TRACING EQUIPMENT. Page 289

A. Test Tubes. Page 291

B. Test Power Consumption. Page 292

C. Trace the Signal and Measure Gain-per-Stage in a Superheterodyne Receiver. Page 293

D. Check R-F By-Pass Capacitors. Page 296

E. Check and Trace the Signal in the A-F Portion of a Radio. Page 298

F. Check the Effectiveness of the Audio By-Pass Capacitors. Page 300

G. Check the Oscillator Output Voltage. Page 301

H. Check the Oscillator for Frequency Drift. Page 301

I. Check a Receiver for Distortion. Page 302

J. Test Voltages in a Receiver. Page 305

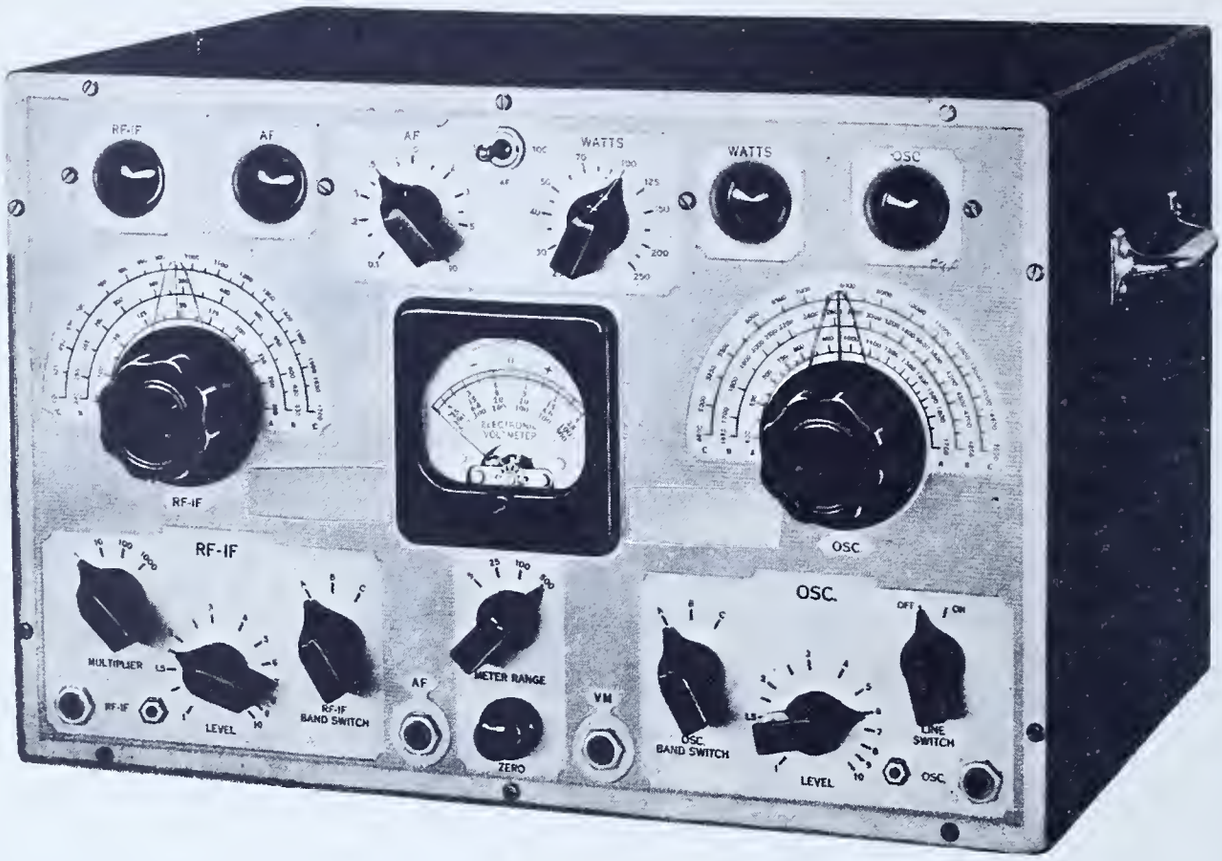

A SIGNAL TRACER

General Information:

Signal tracing is a method of locating trouble because of defective components in a radio. A signal from a test oscillator is fed into the input of the radio, and its progress is traced by the signal tracer through the various stages of the receiver.

An electron ray (or "eye") tube is usually used in the signal tracer to indicate the strength of the signal. Since tuned circuits and vacuum tubes step up the voltage of a signal in the radio, an indication of increased signal strength is to be expected as the signal is traced from the input to the output. At any point in the receiver where the signal is lost or is decreased in strength, a defective stage is indicated. The exact defect in the particular stage can then be readily located by a voltage and resistance analysis of that stage.

Defective tubes and misalignment of circuits as well as defective parts may cause reduced signal strength. In the normal servicing of any radio that works but is weak, time may be saved by testing the tubes and aligning the trimmers of the tuned circuits before signal tracing is attempted.

By the use of an oscillograph or high impedance (crystal) headphones in conjunction with the signal tracer, the quality of the signal may be traced through the stages of the receiver.

Since the signal tracer uses tuned circuits with a calibrated dial and range switch to cover the usual r-f and i-f bands, it can also be used to determine the frequency of r-f and i-f signal voltages in a radio. The signal tracer, therefore, can check the strength, quality, and frequency of signal voltages in a radio.

In order to check signals in the various units of a receiver, as well as to test voltages and power consumption, a typical signal tracer is composed of five test units. The component units of the signal tracer are:

(1) An audio-frequency channel
(2) A radio frequency channel with demodulator
(3) An oscillator channel
(4) A d-c vacuum tube voltmeter
(5) A wattage or line current indicator

(1) The audio-frequency channel contains:

(a) A single-stage, high-gain audio-amplifier.
(b) A diode rectifier:- rectifies the a-f signal to d-c signal which is applied to the eye tube.
(c) An eye tube:- gives a visual indication of the strength of the a-f signal.
(d) A level attenuator:- regulates the gain or amplification of the audio amplifier working in conjunction with a multiplier.
(e) A multiplier:- sets the gain of the level attenuator to a fraction or whole number multiple of each division marked on the attenuator.
(f) An output jack to which phones or oscillograph may be connected.
(g) An input jack to which a special shielded a-f cable with prod is connected. This prod is used in connecting the input of the a-f amplifier in the signal tracer to different points in the radio under test.

(2) The radio frequency amplifier channel with demodulator contains:

(a) A three-stage r-f amplifier.
(b) A diode rectifier:- demodulates any modulated r-f signal.
(c) An eye tube:- indicates the strength of the r-f signal.
(d) A level attenuator:- regulates the gain or amplification of the r-f amplifier working in conjunction with a multiplier.
(e) A multiplier:- switches the gain of the level attenuator to 1, 10, 100 or 1000 times each marked division on the attenuator.
(f) An output jack to which phones, audio amplifier, or V.T.V.M. may be connected.
(g) A band or range switch:- determines which frequency range is covered.
(h) A calibrated dial:- indicates the resonant frequency of the r-f channel.
(i) An input jack to which a special shielded cable is connected. The prod on the end of this cable may be connected to different points of the r-f circuit in testing receivers.

(3) The oscillator channel contains:

(a) A single-stage r-f amplifier.
(b) A diode rectifier:- rectifies the r-f signal to d-c signal which is applied to an eye tube.
(c) An eye tube:- indicates the strength of the oscillator signal.
(d) A level attenuator:- regulates the gain or amplification of the r-f amplifier.
(e) A band or range switch:- determines the frequency range covered.
(f) A calibrated dial:- indicates the frequency of the oscillator tested.
(g) An input jack to which a special r-f shielded cable is connected. The other end of this cable may be connected to the oscillator circuit of a superheterodyne receiver to test its frequency and output.

(4) The d-c vacuum tube voltmeter contains:

(a) A pointer-type movement with several calibrated scales.
(b) A range switch:- sets the movement for the particular range desired for measurements.
(c) A zero adjustment:- sets the pointer to zero.
(d) An input jack to which a test cable is connected in making measurement.

(5) A wattage or line current indicator contains:

(a) A current transformer.
(b) A diode rectifier to operate the eye tube.
(c) An eye tube:- gives an indication of the proper setting of the wattage indicator control.
(d) A wattage or line current indicator:- adjusted until the beam of the eye tube just closes. A reading is then made of the indicator dial to indicate the power used or current consumed by the receiver.

Connections between the signal tracer and the radio are made by special test cables equipped with plugs and prods. The cables used for testing the r-f and oscillator sections contain a small capacitor in the prod to prevent the prod's connection from de-tuning the circuit under test. The V.T.V.M. prod contains a resistor which serves a similar purpose. There is also an inter-channel cable used to connect one section of the signal tracer to another. This cable makes it possible to connect the output of the r-f or oscillator section to the V.T.V.M. or to the input of the audio system if the trouble shooter so desires.

Additional information regarding the signal tracer being used should be obtained from the instruction book supplied with the instrument.

TEST A RADIO WITH SIGNAL TRACING EQUIPMENT

General Information:

The signal tracer is used in this job to test the superheterodyne receiver constructed in Job 11. In general the procedures listed here may be used with any signal tracer, although the type employing an eye tube is preferred.

The trainee should make a copy of the schematic diagram Fig. 1 for easy reference when mention is made of "Points" of measurement.

Specifications:

For each part of the following job the instruction book supplied with the signal tracer should be consulted for proper operation and connections:

A. Test the following tubes:
   1. 6A8
   2. 6K7
   3. 6Q7
   4. 6F6

B. Test the power consumption of a receiver at:
   1. Normal load
   2. Less than normal load
   3. Overload

C. Trace the test oscillator signal through a receiver and calculate the gain-per-stage in the following stages:
   1. Converter or mixer stage
   2. Radio frequency amplifier

D. Test r-f by-pass capacitors for operating effectiveness.

E. Trace the test oscillator signal through the a-f stages of a receiver and calculate the gain of each stage. Calculate the step-down ratio of the output transformer.

F. Test a-f by-pass capacitors for operating effectiveness.

G. Test the operation of the receiver oscillator for constant voltage output at both ends of the range of frequency of the oscillator.

H. Test the operation of the receiver oscillator for frequency drift.

I. Check distortion in converter, i-f and a-f stages.

J. Check d-c voltages at all points in receiver.

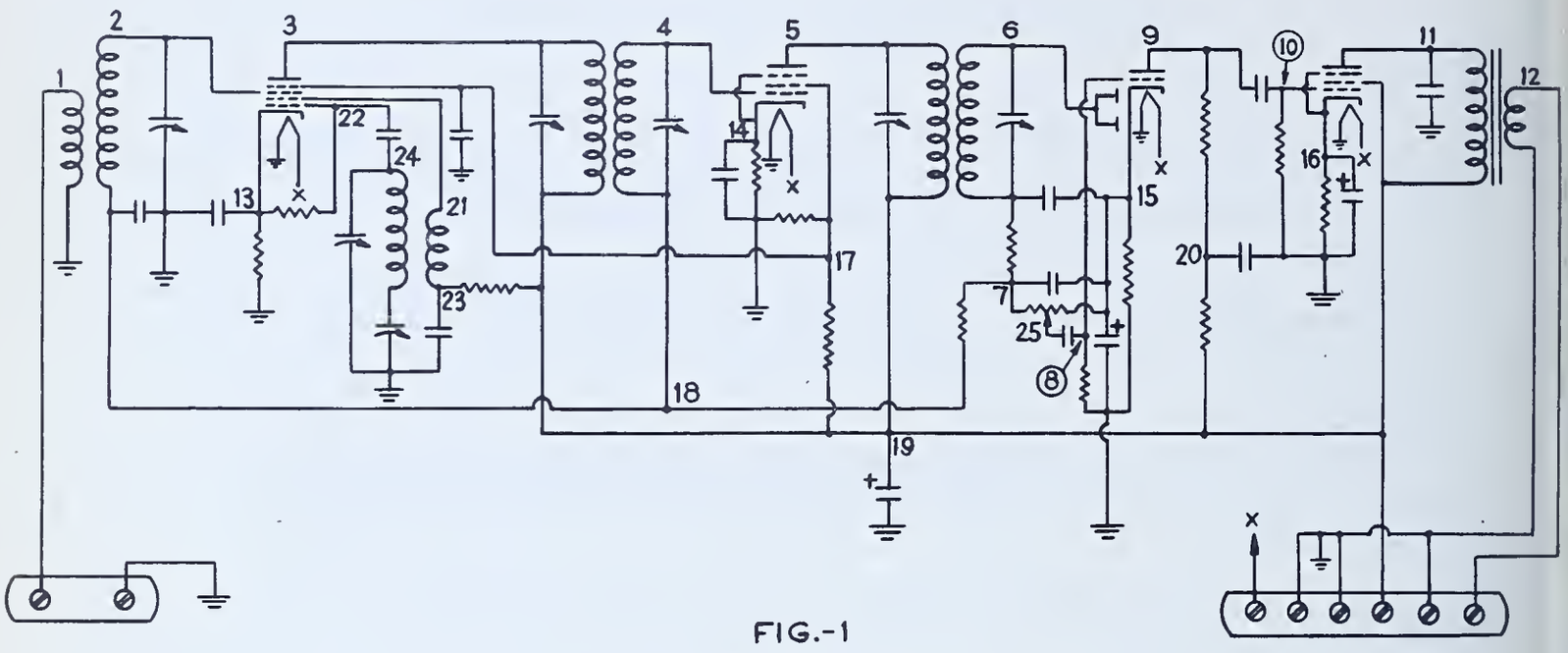

FIG.-1

SUPERHETERODYNE RECEIVER

Tools needed:

1. Soldering iron
2. Long nose pliers
3. Diagonal cutting pliers

Materials needed:

1. Push-back wire
2. Solder
3. 1- 10 ohm 10 watt resistor
4. 3- 6A8 tubes
5. 3- 6K7 tubes
6. 3- 6Q7 tubes
7. 3- 6F6 tubes

Equipment needed:

1. Signal tracer - complete with leads and instruction book
2. Receiver constructed in Job 11 - complete with tubes and power supply
3. Service oscillator
4. Phones (crystal preferred)

A. Test Tubes

Note: Study the use of the a-f channel in instruction book. This test for tubes is comparative. For this reason, a set of tubes known to be good should be installed in the receiver before substituting any tube of unknown quality.

Procedure:

1. Connect power supply to receiver to furnish required voltages.
2. Connect power supply to a-c line and turn on.
3. Connect the r-f signal generator output to the antenna and ground connections of the radio.
4. Connect the signal generator to the a-c line and turn it on.
5. Set the radio and signal generator to 1400 kc. Turn on the modulation switch of the signal generator.
6. Connect input of the a-f channel of signal tracer to output of receiver (plate of power amplifier tube) by means of the a-f prod.
7. Short out the AVC in the receiver. (Connect wire from grid return of first i-f transformer to chassis.)
8. Turn the level control of the a-f channel in the signal tracer to maximum. Turn receiver volume control to "half-full".
9. Reduce attenuator of signal generator so the eye tube on the audio channel of signal tracer just closes.
10. Replace tubes in receiver, one at a time. If eye tube overlaps, the tube just inserted is better than the old one. If eye tube opens, the new tube is not as good as the old one. If eye tube stays in same position, tubes are of the same quality. Tabulate condition of each tube in notebook on copy of form 1.
11. Tap the tube under test. If the eye vibrates, the tube is defective (noisy or leaky).

B. Test Power Consumption

Note: Study instruction book for use of wattage indicator.

Procedure:

1. Insert receiver power supply plug into the proper receptacle on the signal tracer.

2. Plug in the signal tracer power cord to 105-125 volt a-c outlet.

3. Turn on the power supply and the signal tracer.

4. Permit one minute for the equipment to heat.

5. Adjust wattage or current control until the eye tube just closes.

6. Read and tabulate in notebook the power or current indicated by the pointer of the control. See form 2.

7. Remove the rectifier tube from the power supply.

8. Adjust signal tracer control so eye tube again just closes. Tabulate new wattage in notebook on the copy of form 2.

9. Replace rectifier tube.

10. Short (momentarily) the 6.3 volt heater circuit at the power supply and adjust wattage or current control until eye just closes. Remove short.

    Caution: DO NOT PERMIT SHORT TO REMAIN FOR LONGER THAN FIVE SECONDS.

11. Determine and tabulate the wattage adjustment made when the heater circuit was shorted.

C. Trace the Signal and Measure Gain-per-Stage in a Superheterodyne Receiver

Note: Study instruction manual for use of r.f.-i.f. channel of signal tracer. Refer to Fig. 1 for circuit connections indicated by numbers. Where required, tabulate calculated gain in notebook on copy of form on Question Sheet.

Procedure:

1. Connect the output of the test oscillator to the antenna and ground connections of the radio.

2. Connect the receiver power supply and signal tracer to a-c line and turn them on.

3. Set the test oscillator for a 1400 kc. modulated signal.

4. Connect the r.f.-i.f. cable plug to the input of signal tracer and the prod of the cable to the antenna post (Point 1) in the receiver. See Fig. 1.

5. Set the multiplier and level attenuator controls of the r.f.-i.f. channel to the value marked "1".

6. Set the r.f.-i.f. band switch to the broadcast band position.

7. Connect the ground lead from the signal tracer to the chassis of the receiver.

8. Adjust the test oscillator output attenuator to maximum position.

9. Turn the dial of the signal tracer to 1400 kc. and adjust dial to the position where maximum lap of eye tube is obtained.

10. Adjust the output attenuator of the test oscillator so that the eye tube just closes.

    Note: If eye tube cannot be made to close or lap, set output control of oscillator so that the eye tube is half closed. Note the amount of open area carefully, as this must be used as a reference position.

11. Connect test prod to G_3 of the mixer tube (Point 2, Fig. 1). The eye tube should be closed more than before, indicating gain from the antenna transformer.

12. Adjust level attenuator control of r.f.-i.f. channel until eye is at previous position (either just closed or half closed, as in Step 10).

13. Calculate signal gain in antenna transformer. The signal gain equals the reading of the level attenuator control obtained in Step 12, divided by the original setting (1) of the control in Step 5. Enter results in a copy of form 3.

    Note: If a signal gain is not found in the antenna transformer, check resistance of the transformer and associated circuit to find a defect. The alignment of the mixer circuit also must be checked, because improper alignment of the antenna transformer secondary trimmer capacitor will cause a loss in signal voltage at G_3 of the mixer tube (Point 2).

14. Connect the test prod to plate of mixer tube (Point 3).

15. Adjust level or attenuator control of signal tracer so eye tube is at original reference level.

16. Determine whether there is gain or loss at this point by calculating as in Step 13. A loss at this point is normal because the r-f and not the i-f signal is measured here. Complete absence of the signal (indicated by the eye tube opening fully) indicates trouble in the mixer stage. A voltage and resistance analysis should then be made on this stage to find defects. The 6A8 mixer tube also must be tested, because a defective tube may cause absence of signal at plate of the mixer tube (Point 3).

17. Set the signal tracer band or range switch to the i-f range of the signal tracer.

18. Adjust dial until eye tube closes, indicating the i-f frequency. Note the i-f frequency.

19. Adjust level or attenuator control to set the eye tube to original reference position. Calculate gain to plate of mixer tube (Point 3) as in Step 13 and record in the copy of form 3.

    Note: If eye tube cannot be returned to original reference position by adjusting level or attenuator control, proceed as follows:

    a. Set multiplier to next highest position (10).
    b. Adjust level control so eye tube now is at reference level.

    Voltage gain from the original position (1) of the test prod is now calculated by multiplying the position of the level control as set up in Step "b", by 10.

20. Calculate gain between G_3 of the mixer tube (Point 2) and plate of mixer tube (Point 3). Record as before.

    Note: Voltage gain between Points 2 and 3 equals the voltage gain found in Step 19, divided by the voltage gain found at Point 2 (Step 13).

21. Connect test prod to control grid of i-f tube (Point 4, Fig. 1). Adjust controls to return the eye tube to reference position.

22. Calculate overall voltage gain to this point. Record in form 3.

23. Calculate voltage gain of first i-f transformer between the plate of mixer tube (Point 3) and control grid of i-f tube (Point 4). Use the same method as in Step 20. Record result.

24. Connect test prod to plate of i-f tube (Point 5, Fig. 1).

25. Adjust controls of signal tracer to return eye tube to reference position.

26. Calculate voltage gain between control grid of i-f tube (Point 4) and plate of i-f tube (Point 5). Record. If no gain is obtained, check 6K7 tube and associated circuit for defects.

27. Connect test prod to diode of demodulator (Point 6).

28. Set controls of signal tracer to return the eye tube to the reference position.

29. Calculate signal voltage gain between plate of i-f tube (Point 5) and diode of demodulator (Point 6). Record.

    Note: Loss of signal at Point 6 indicates defective or misaligned i-f transformer.

    This concludes the tracing of the signal through the r-f and i-f portions of the radio.

30. Leave oscillator connected to receiver for next procedure.

D. Check R-F By-Pass Capacitors

Procedure:

1. Test oscillator should be still connected to receiver to supply a signal as in previous procedure.

2. Turn multiplier of signal tracer to the maximum position (1000).

3. Connect test prod to antenna post (Point 1, Fig. 1).

4. Adjust signal tracer to broadcast position and turn dial of signal tracer so eye overlaps to maximum extent.

5. Turn level control to position number 10.

6. Remove test prod from antenna post (Point 1). Eye tube should open.

7. Connect test prod to cathode of mixer tube (Point 13). If eye tube closes completely, the 6A8 cathode capacitor is not operating efficiently. If eye tube closes slightly, capacitor is good. If eye tube opens more, capacitor is shorted.

8. Connect test prod to grid return of i-f amplifier tube (Point 18). The AVC capacitor may be judged by indications similar to those given in Step 7.

9. Connect test prod to plate of mixer tube (Point 3).

10. Adjust range and dial of signal tracer to intermediate frequency of the receiver under test so that the eye has a maximum lap.

11. Connect test prod to grid return of i-f amplifier tube (Point 18) again. Notice if any change in the indication of the eye tube between Step 8 and this step is secured. The action of the AVC capacitor in by-passing the r-f signal was checked in Step 8. The action of the capacitor in by-passing the i-f signal is checked in this step.

12. Connect the test prod to screen grid of i-f amplifier tube (Point 17). This checks the screen grid by-pass capacitor. Use the same factors as were used in Step 7 to determine the efficiency of operation of the by-pass capacitor.

13. Connect the test prod to cathode of i-f amplifier tube (Point 14). This checks the 6K7 cathode capacitor.

14. Open the lead of the 6K7 cathode capacitor that connects to the cathode.

15. Notice the difference in the eye opening when the capacitor is connected and when the capacitor is removed from the circuit.

16. Connect the test prod to B+ (Point 19). This checks the B+ by-pass capacitor for its action in by-passing the i-f signal.

17. Connect the test prod to cathode of first audio tube (Point 15) This checks the 6Q7 cathode by-pass capacitor for radio frequency.

18. Connect the test prod to diode return side of volume control (Point 7). This checks the effectiveness of the i-f filter circuit in the diode return circuit of the second i-f transformer. If the eye tube closes to any great extent when the prod is on Point 7, the filter is not very effective.

Note: This concludes the testing of the r-f circuit capacitors.

Leave the apparatus connected for the next portion of the job.

E. Check and Trace the Signal in the A-F Portion of the Radio

Note: Since a modulated r-f signal is supplied by the test oscillator to the input of the radio as in the previous procedure, the signal will be demodulated by the diode rectifying action of the 6Q7, and the audio component will appear across the volume control.

Procedure:

1. Connect the a-f cable plug to the input of the a-f channel on the signal tracer.

2. Set the a-f multiplier to the most sensitive position (.1 or 1.).

3. Connect the a-f test prod to diode return side of volume control (Point 7, Fig. 1). Do not hold or touch tip of prod when making tests. This may give an erroneous reading.

4. Set level or attenuator control of a-f section of signal tracer to position number 1.

5. Adjust output attenuator of test oscillator so the eye tube on the signal tracer just closes.

6. Connect a-f test prod to arm of volume control (Point 25).

7. Adjust volume control of receiver and notice how eye tube opens and closes as control is varied. Leave volume control on receiver set to maximum position.

8. Connect a-f test prod to grid of first audio tube (Point 8). Eye on a-f channel of signal tracer should close to same point as in Step 4. If eye does not close, an open coupling capacitor between the diode return side of volume control (Point 7) and Point 8 is indicated.

9. Connect a-f test prod to plate of first audio tube (Point 9). The eye tube should now overlap.

10. Turn level or attenuator control of signal tracer clockwise until the eye tube again just closes. Tabulate new position of control on a copy of form 5. The gain or amplification of the 6Q7 tube is indicated by this reading.

11. Connect the a-f test prod to grid of power output tube (Point 10). The eye tube should remain in the same position as in Step 10. If eye tube fails to close, the coupling capacitor between the plate of the first audio tube (Point 9) and Point 10 is open.

12. Connect the test prod to plate of power output tube (Point 11). The eye tube now should overlap. If the eye tube cannot be returned to the just-closed position by advancing the level or attenuator control, turn the multiplier switch to the number 10 or 100 position.

13. Adjust the level attenuator so that the eye tube just closes. If the eye tube does not close, a defective 6F6 or defective circuit components in the 6F6 stage may be causing the loss of signal.

14. Calculate the voltage gain of the audio system. This gain is obtained by multiplying by 100 the reading of the level attenuator obtained in Step 13.

15. Calculate the voltage gain of the 6F6 stage as follows: Divide the value calculated in Step 14, by the value obtained in Step 10. Record on form 5.

16. Connect the a-f test prod to the ungrounded side of the speaker voice coil (Point 12). Since the output transformer has a step-down ration the voltage at Point 12 will be reduced; and the eye tube will open.

17. Adjust the level attenuator and multiplier switch so that the eye tube is closed when the test prod is on the ungrounded side of the speaker voice coil (Point 12).

18. Calculate the step-down ratio of the output transformer. This is done by dividing the value obtained in Step 14 by the value obtained in Step 17. Record on form 5.

    Note: This completes the signal tracing of the audio system of the receiver.

19. Leave test oscillator connected.

F. Check the Effectiveness of the Audio By-Pass Capacitors

Note: The controls of the a-f section of the signal tracer are adjusted as follows:

a. Level attenuator to "1" position.
b. Multiplier to ".1" or "1." position.

Procedure:

1. Connect a-f test prod to diode return side of volume control (Point 7).

2. Set output attenuator of signal generator so eye tube just closes.

3. Connect a-f test prod to cathode of first audio tube (Point 15). Eye tube should now be open. To determine effectiveness of 6Q7 cathode capacitor, short the capacitor. Note effect on eye tube. Open one lead of the capacitor by disconnecting it from the cathode. Note the effect on the eye tube.

4. Connect a-f test prod to plate return of first audio amplifier (Point 20). Note opening of eye tube. Remove by-pass capacitor connected to Point 20. Notice effect on the eye tube. Short Point 20 to chassis. Note opening of eye tube.

5. Connect a-f test prod to cathode of power output stage (Point 16). Note effect on eye tube when opening the cathode by-pass capacitor.

6. Connect a-f test prod to B+ (Point 19). Note effect of opening B+ by-pass capacitor.

7. Disconnect the test oscillator and return it to stock room.

G. Check the Oscillator Output Voltage

Note: Study instruction book on the use of the oscillator channel.

Procedure:

1. Connect the r-f cable to the oscillator input jack on the signal tracer.

2. Connect the prod of the r-f cable to plate of oscillator tube (Point 21) or to the stator of the oscillator tuning capacitor (Point 24). See Fig. 1.

3. Set the oscillator band or range switch to the middle position.

4. Set the oscillator level attenuator to the number 5 position.

5. Adjust signal tracer oscillator dial until eye tube closes to maximum extent.

6. Record frequency as indicated on signal tracer dial on a copy of form 4. This is the frequency of the oscillator.

   Note: Receiver is tuned to 1400 kc. as in the previous jobs.

7. Adjust level attenuator on the signal tracer so eye tube just closes. Tabulate setting of the attenuator.

8. Turn dial of receiver to about 550 kc. (plates of tuning capacitor completely meshed).

9. Adjust range switch and dial of signal tracer to cause the eye to close again. Tabulate the frequency indicated by signal tracer.

10. Adjust level control so the eye is again just closed. If the receiver oscillator output is constant over the entire broadcast band, no adjustment of the level attenuator should be necessary. It is desirable that the output of the receiver oscillator be constant. Therefore, the greater the adjustment necessary for this step, the less uniform is the oscillator's output. Tabulate setting of the attenuator.

H. Check the Oscillator for Frequency Drift

1. Repeat Steps 1-5 of above procedure G.

2. Adjust level attenuator so that the eye tube just closes.

3. Permit apparatus to remain in this condition for at least 5 minutes.

4. Notice if eye tube is still closed. If it is not, vary dial of signal tracer in either direction slightly to the position where eye tube again closes. If dial need not be varied and eye tube does not change in the 5-minute period, there is no frequency drift. The greater the variation of the dial of the signal tracer required to bring back the original the eye tube (just closed), the greater will be the oscil-

I. Check a Receiver for Distortion

General Information:

In the signal tracing jobs performed so far in this unit, the presence and strength of the signal have been the major considerations. In this section of the job, the signal will be traced to determine distortion in a particular stage.

Either an oscillograph or phones may be used in conjunction with the signal tracer to locate distortion. The procedure of this Job Sheet utilizes the phones with the signal tracer. The phones provide a quicker method of testing and are more generally used. Since the oscillograph has been used in previous jobs, its application with the signal tracer in checking for distortion is but briefly reviewed in this discussion.

In using the oscillograph, the "vertical" terminals of the CRO are connected to the output of the r.f.-i.f. channel of the signal tracer. A modulated r-f signal is fed into the antenna and ground connections of the radio by the test oscillator. The r.f.-i.f. prod of the signal tracer is connected first to the antenna post (Point 1, Fig. 1). The CRO is adjusted to trace a pattern of the audio note used to modulate the test oscillator (usually 400 cycles). The level attenuator and multiplier controls of the signal tracer are adjusted to regulate the height of the pattern on the screen of the CRO.

With the test prod on Point 1, the wave shape should be a sine wave, providing the test oscillator is modulated by an audio signal having a sine wave form. This is a reference wave form.

The test prod then is connected to G_3 of the mixer tube (Point 2, Fig. 1). The wave form should be of the same wave shape now as the reference wave form. The level attenuator must be adjusted to keep the height of the wave form constant throughout the tests.

The test prod then is connected to the plate of the mixer tube (Point 3). The range switch and dial of the r.f.-i.f. channel on the signal tracer must now be set to the i-f frequency of the receiver. The wave form is checked at this point. Any variation in wave shape indicates distortion due to the 6A8 mixer stage.

The wave forms are checked at the control grid of the i-f tube (Point 4), at the plate of the i-f tube (Point 5) and at the diode of the demodulator (Point 6). Any irregularity in wave form at any one point is due to distortion in the stage preceding that point.

The signal may be traced through the audio channel by means of the CRO without using the signal tracer. See Job 6 or 13.

Distortion may be traced through the radio by means of headphones and the signal tracer, as follows:

Procedure:

1. Plug one end of the inter-channel cable into the r.f.-i.f. channel output jack and the other end into the a-f channel input jack.

2. Connect the headphones to the output jack on the a-f channel of the signal tracer.

3. Connect an antenna and ground to the receiver.

4. Operate the receiver and tune in a strong station.

5. Connect a 10 ohm, 10 watt resistor to the output of the radio in place of the speaker (voice coil).

6. Connect the r.f.-i.f. test cable into the signal tracer and connect the prod to the antenna post in the receiver.

7. Tune r-f channel of the signal tracer to the same station being received by the receiver.

8. Adjust level attenuator and multiplier controls of signal tracer for a strong signal in the headphones. This signal should be clear and distinct if the signal tracer is in good working condition.

9. Connect test prod to plate of the mixer tube (Point 3, Fig. 1).

10. Tune signal tracer to intermediate frequency of the radio. Signal should be clear in phones; if not, distortion is in the mixer stage.

11. Short grid return of the i-f amplifier (Point 18) to chassis in radio. Notice if distortion is evident in phones.

12. Remove short.

13. Connect test prod to plate of the i-f tube (Point 5).

14. Reduce multiplier or level attenuator on signal tracer i-f channel to keep volume of signal in phones constant. If signal is not clear in phones, distortion is due to first i-f stage.

15. Short grid return of i-f amplifier tube (Point 18) to chassis. Notice distortion now evident in phones due to removal of AVC voltage applied to grids of r-f tubes. This removal permits the tubes to overload (grids are made positive by strong signal voltage) so that distortion results.

16. Remove short.

17. Remove inter-channel plug from signal tracer.

18. Connect a-f test cable to input of a-f channel.

19. Connect a-f test prod to diode return side of volume control (Point 7).

20. Adjust a-f level attenuator so that the signal in the phones is loud and clear. If distortion is present, the demodulator stage is defective.

21. Connect a-f test prod to grid of first audio tube (Point 8). Note signal in phones.

22. Connect a-f test prod to plate of first audio tube (Point 9).

23. Adjust a-f level attenuator to keep signal in phones at a constant level. Distortion in phones indicates trouble in 6Q7 stage.

24. Connect the a-f test prod to grid of power output tube (Point 10). Distortion in phones indicates a leaky coupling capacitor.

25. Connect a-f test prod to plate of power output tube (Point 11). Distortion in phones now indicates defective operation of the 6F6 power amplifier tube. This may be due to a defective tube, improper bias resistor, or other defective circuit components.

26. Connect a-f test prod to ungrounded side of speaker voice coil (Point 12).

27. Adjust a-f channel attenuator for normal volume in phones. Any distortion now evident is due to defective output transformer.

J. Test Voltages in a Receiver

Note: Study the instruction book to determine the proper operation of the vacuum tube voltmeter.

Procedure:

1. Place receiver in operation. Tune in a station.

2. Place signal tracer in operation.

3. Set zero adjustment so that the pointer of the V.T.V.M. is at zero.

4. Connect ground lead from signal tracer to chassis of receiver.

5. Connect proper test cable to V.T.V.M. jack.

6. Check voltages at the following points, which refer to those designated in Fig. 1, by connecting the test prod to the indicated circuits. List the voltage in notebook for each circuit tested in copy of the form illustrated below (Fig. 2).

Point Tested to Chassis	Voltage to Chassis
2	
3	
17	
21	
13	
18	
4	
5	
14	
6	
7	
15	
9	
20	
19	
10*	
16	
11	
23	

Fig. 2

* Voltage at this point indicates a leaky coupling capacitor.

QUESTIONS

Place the answers to these questions in your notebook or on form as directed by instructor.

1. What is meant by signal tracing?
2. What piece of additional test equipment is most often used when checking a receiver with the signal tracer?
3. What device indicates the strength of the signal in the signal tracer?
4. What are the several functions that the signal tracer can perform?
5. What should be done to a radio which gives weak reception before signal tracing is attempted?
6. How is the quality of the signal determined when using the signal tracer?
7. Can the frequency of r-f or i-f signals be checked on the signal tracer? How?
8. What individual units compose the signal tracer?
9. Was the test for tubes an absolute or a comparative test?
10. Is a modulated or unmodulated signal used in signal tracing?
11. How were by-pass capacitors checked?
12. How was an open capacitor indicated?
13. Why was the end of the test prod not touched when tests were made?
14. Why was the signal voltage less at the secondary of the output transformer than at the primary?
15. Why are power consumption tests important?
16. How may the signal tracer be used to locate hum in a receiver?
17. How is it possible to measure a-c voltages using the V.T.V.M. of the signal tracer?
18. How is the receiver oscillator checked for frequency drift?

References:

Everitt, W. L. et al., Fundamentals of Radio, p. 142.
Henney, K., Principles of Radio (Fourth Edition), pp. 417-419.

TABULATION FORMS

Form 1

Place check in appropriate block to indicate condition of tube.

Part A		6A8			6K7			6Q7			6F6		
		#1	#2	#3	#1	#2	#3	#1	#2	#3	#1	#2	#3
Eye Tube Position	Lap												
	Same												
	Open												
	Vibrates												
Condi-tion of Tube	Better												
	Same												
	Worse												

Form 2

Part B	Power or Line Current
Step 6 Normal Load	
Step 8 Less than Normal Load	
Step 11 Overload	

Form 4

Part G	Frequency	Attenuator Setting
Step 6 & 7		
Step 9 & 10		

Form 3

Part C	Stage Gain	Overall Gain
Step 13 Antenna Coil		
Steps 19 and 20 6A8 Tube		
Steps 22 and 23 I-F Transformer #1		
Step 26 6K7 Tube		
Step 29 I-F Transformer #2		

Form 5

Part E	Stage Gain	Overall Gain
Step 10 6Q7 Tube		
Step 15 6F6 Tube		
Step 18 Output Transformer	Step-down Ratio	

UNIT 16

RECEIVER TROUBLE SHOOTING

JOB SHEET 16 — RECEIVER TROUBLE SHOOTING. Page 310

A. Dead Set. Page 313

B. Distortion. Page 316

C. Fading. Page 317

D. Hum. Page 318

E. Intermittent Reception. Page 319

F. Noisy Operation. Page 320

G. Oscillation. Page 322

H. Weak Reception. Page 324

RECEIVER TROUBLE SHOOTING

General Information:

To "trouble-shoot" a receiver is to locate the circuit faults which prevent the unit from operating properly.

Trouble shooting should be done by a systematic process, using the proper test equipment to locate the fault in the shortest possible time. It should not be done by haphazard aimless circuit analysis.

There are eight general types of trouble occurring in receivers, all of which must be readily recognized by the repairman; these are:

A. Dead set
B. Distorted output
C. Fading (gradual variations in volume)
D. Hum in output
E. Intermittent reception
F. Noisy operation
G. Oscillation (whistles or produces a "putt-putt" noise)
H. Weak reception

One should observe from the behavior and operation of the receiver which of these conditions are present. From these symptoms, plus a few selected tests, it is possible to narrow the fault to a particular stage or part of a stage.

The trouble-shooter must have a mental picture of the circuit as a whole and a knowledge of the correct operating characteristics, so that the symptoms indicated by the faulty operation of the receiver will be recognized and properly evaluated.

Methods of Analysis. The methods most commonly used are:

(1) Point to point voltage and resistance measurements.
(2) Signal tracing.
(3) Signal injection.
(4) Circuit disturbance.
(5) Stage elimination.

Each of the above methods serves to locate a particular type of trouble quickly and accurately. The trainee should be familiar with the procedures relating to all of them, because in doing a trouble-shooting job it may be necessary to use several of these methods to localize all the troubles and locate the faulty parts. In this unit all methods are used.

Specifications:

1. Locate, in at least four defective receivers, the respective sources of trouble by using whichever of the following procedures is applicable. Select the procedure on a basis of the symptoms of trouble exhibited by the receiver; i.e., dead, noisy, weak, etc.

2. Make such repairs as are necessary to correct the troubles by replacement, repair, or adjustment of the defective parts.

3. Record tests, procedures used, and corrections made on copies of the form found on the Question Sheet.

Tools needed:

1. Soldering iron
2. Long nose pliers
3. Diagonal cutting pliers

Materials needed:

1. Rosin core solder

Equipment needed:

1. 1- Multimeter
2. 1- Radio frequency signal generator (equipped for amplitude and frequency modulation)
3. 1- Audio frequency signal generator (BFO)
4. 1- Signal tracer
5. 1- Vacuum tube voltmeter
6. 1- Cathode ray oscillograph
7. 1- Tube checker
8. 1- Alignment kit
9. 4- Superheterodyne receivers - one weak, one dead, one which oscillates, and one which is intermittent. Schematic diagrams should be available for each set.

Note: The instructor should prepare the receivers with various faults. The sets should be numbered so that the instructor can check the reported results against his record of the trouble which he has provided for a particular assignment.

Procedure:

1. Obtain a faulty superheterodyne receiver from the stock room.

   Note: When this receiver is repaired to the satisfaction of the instructor, return it and proceed with another one. Repeat for at least four different types of trouble. If time permits, work on additional faulty receivers.

2. Obtain necessary tools, test equipment and schematic diagrams from the stock room.

3. Study the schematic diagram of the receiver to become familiar with the function of the various parts and their location.

4. Plug the receiver into the proper a-c outlet.

5. Connect the antenna and ground to the proper terminals.

6. Turn the receiver on and allow it to warm up.

7. Analyze the type of trouble according to the symptoms exhibited by the receiver.

8. Proceed with the location of the trouble according to whichever of the following procedures applies to the observed symptoms; and record in order of performance on separate copies of form 1, the following: (1) receiver tested, (2) symptoms observed, (3) method used to locate the defective stage or stages, (4) the stage where the trouble exists, (5) method used to locate cause of trouble within the stage, and (6) the repairs made.

A. Dead Set

General Information:

In general, dead sets may be considered as those which will not perform when connected for operation, regardless of manipulation of controls. This condition is evidenced by the absence of a signal in the loudspeaker when the receiver is tuned to a station or signal generator which would normally produce response in the speaker.

The most usual causes of a dead set are:

(1) Burned out or defective tubes.
(2) Incorrect resistance values (open or short circuits).
(3) Incorrect voltage conditions at the tube socket terminals.

These conditions may be corrected by application of the following procedure. However, it should be remembered that even after the dead set condition is corrected, other faults may remain and must be analyzed and corrected as given in subsequent procedures.

Procedure:

1. Turn on the receiver.

2. Observe whether the tubes heat (light).

   Note: If the set uses metal tubes, place the hand on the output and rectifier tubes after the set has been turned on about one minute and notice if they get warm. If all the tubes get warm except the rectifier, turn the receiver off.

3. Check the resistance from the rectifier filament to ground. A direct short circuit reading on the ohmmeter will indicate:

   a. A shorted filter capacitor.
   b. A grounded tube socket filament terminal.
   c. A ground at the rectifier filament winding of the power transformer, or along the leads connecting the transformer winding to the rectifier tube socket.

   If a short circuit is indicated, disconnect all wires which connect to the filament circuit of the rectifier and check each lead individually for its resistance to ground. This will isolate the defective part from other possible causes of trouble, and permit its identification.

4. Repair or replace defective items found in Step 3.

5. Test all the tubes in the receiver with a tube tester.

6. Replace defective tubes.

7. Turn on the receiver and advance the volume control to full on.

8. Touch the control grid of the first audio amplifier stage with the finger. This is one of the methods used in circuit disturbance analysis. Take care that the chassis (ground) is not touched when performing this operation.

   Note: Injection of an audio signal may be used in lieu of touching the control grid with the finger.

   A loud buzzing sound will indicate that the audio amplifier system is operating. If no buzz is heard, check the output stage by momentarily grounding the control grid of the output tube to the chassis. This will result in a click in the loudspeaker which will indicate that the output stage is working. If no click is heard, the output stage is inoperative.

9. Perform a resistance and voltage analysis of the audio system and its power supply to correct such faults as may be discovered in Step 8.

10. Make the necessary repairs to provide proper operation of the audio system.

11. Repeat Step 8 to confirm proper operation of audio system.

12. Remove the grid cap from the i-f tube.

13. Lightly tap the grid cap against the control grid.

    A loud click should be heard in the loudspeaker which indicates that the r-f and demodulator are in operating condition. If no click is heard, proceed to Step 14.

14. Replace the grid cap on the i-f tube.

15. Inject a strong modulated i-f signal of proper frequency into the control grid of the i-f amplifier.

16. Adjust the i-f trimmers slightly to determine whether or not the i-f transformers are in alignment. (If a strong signal is heard in the speaker, the i-f and demodulator channel is working.) If no signal is heard, proceed with Step 17.

17. Make a resistance and voltage analysis of the i-f amplifier and demodulator circuits to locate such faulty parts as may be present.

18. Repair or replace such defective parts.

19. Inject the i-f signal and adjust trimmers again as in Steps 15 and 16 to check the operation of the i-f and demodulator stages.

20. Remove the grid caps from the control grid terminals of the mixer and r-f amplifier in turn. A loud click will indicate that these stages are in operation. If no click is heard, these stages are inoperative and Steps 15, 16, 17 and 18 should be applied to locate and correct circuit errors.

21. Short circuit the oscillator grid to ground; this should result in a click in the loudspeaker if the oscillator is working. If no click is heard, perform a resistance and voltage analysis of the oscillator circuit to locate the defective parts.

22. Replace defective parts.

23. Remove the antenna lead-in from the antenna terminal and lightly tap the lead-in against the terminal. A loud click in the speaker indicates the whole receiver to be operative. No click will indicate trouble in either the primary or secondary circuit of the antenna transformer (coil). The antenna coil should then be checked for shorts or open circuits.

24. Proceed with any additional steps that may be necessary to place the receiver in correct operating condition. The proper procedure to use will be determined by any additional symptoms that may be observed.

B. Distortion

General Information:

There are two practical methods for determining the presence of distortion. Any decided amount of distortion can be noted by ear, but hearing ability varies widely and is not sufficiently accurate for recognition and repair of distortion. Exact measurement is obtained by use of the oscillograph.

The trouble shooter must know the expected performance of the receiver in order to judge its present condition. In a receiver designed for the reception of musical entertainment of the ordinary variety, faithful reproduction of musical tones within the normal range of hearing is required. If the receiver is of the high fidelity type, a more extended range of audio-frequency reproduction would be required, while for cw (code) reception, a very limited audio-frequency response is satisfactory.

Not all distortion occurs in the audio amplifier system. Conditions set up by errors in the r.f.-i.f. and demodulator circuits may be responsible for the distorted reproduction.

In any event the signal should be traced from the input (antenna) to the output and the point determined at which the distortion becomes apparent. The stage immediately preceding this point is generally the one at fault. Application of resistance and voltage analysis will usually locate the faulty part in this stage.

Procedure:

1. Connect the receiver to proper outlet and turn it on.

2. Use the signal tracing procedure as outlined in Job 15 to determine which stage of the receiver is causing the distortion.

3. Make a resistance, voltage, and visual analysis of this stage (or stages) to locate the defective parts.

4. Repair or replace defective parts.

5. Place the receiver in operation and perform the tests necessary to ascertain the absence of distortion.

C. Fading

General Information:

"Fading" in a receiver is a variation in the strength of its output which may occur at regular or irregular intervals. Fading may be caused by either:

(1) Atmospheric conditions affecting the transmission of the signal.
(2) Variable conditions within the circuit of the receiver.

The trouble shooter must be able to distinguish between these causes; there is no ready means of controlling the first; the second usually may be readily corrected by the repairman.

Common causes of fading in the receiver are generally one or more of the following items:

(1) Wave change (band) switch contacts loose or dirty.
(2) Defective tubes.
(3) Intermittently open or leaky capacitors.
(4) Loose winding on r-f coils and chokes and i-f coils.
(5) Poor ground contacts, especially at the tuning capacitors.
(6) Variable contact resistance in volume controls.
(7) Changing value of resistor due to heating after the set is in operation.
(8) Poorly soldered connections.
(9) Defective dielectric in trimmer and padder capacitors.

A suggested method of locating the cause of fading is to apply stage elimination or signal tracing procedures as outlined in Job 15 to determine which of the stages of the receiver is at fault. After the stage has been determined, application of resistance and voltage checks and visual inspection of the various elements will generally result in the location of the faulty part.

Procedure:

1. Place the receiver in operation.

2. Use signal tracing procedure as outlined in Job 15, observing which stage is subject to changes in operating characteristics at the time the fading occurs.

3. Inspect or test that stage for any of the above items which may cause fading.

4. Repair or replace all items found to be defective.

5. Place the receiver in operation and observe its performance to check the correction of the fading condition.

   Note: The use of a signal generator and output indicator is advisable rather than an audible check.

D. Hum

General Information:

Hum may be recognized as a continuous tone, usually of 60 or 120 cycles, present in the output from the loudspeaker. The hum may be present only when a station is received, or it may be present at all times.

The most usual causes of hum are one or several of the following:

(1) Open filter capacitors.
(2) Shorted turns in filter chokes.
(3) Short circuit within the tubes (heater to cathode).
(4) Open by-pass capacitors in decoupling circuits.
(5) Changing inductance of filter choke due to variation in air gap.
(6) Magnetic coupling between power and audio transformers.
(7) Inductive or capacitive coupling between heater, plate, and grid leads.

The application of signal tracing procedures and the use of the oscillograph along with observations by listening are applicable in tracing down the stage in which the hum originates. After the stage has been located, the various parts and the source of power to that stage must be analyzed to locate the particular faulty item.

Procedure:

1. Turn on the receiver and allow it to warm up.

2. Perform an analysis with the CRO as outlined in Job 13, Part II, B, to locate the stage in which the hum originates.

3. Make a resistance and voltage analysis of the faulty stage and its power supply to locate the faulty parts.

4. Repair or replace such faulty circuit elements as may be found in Step 3.

5. Operate the receiver to check the absence of hum.

E. Intermittent Reception

General Information:

An intermittent receiver is one in which the signal cuts off abruptly, stays off, or is very weak for an interval, and suddenly begins normal operation again.

This type of trouble is often difficult to locate due to the indefinite time of occurrence. However, the use of the channel type analyzer is quite effective in locating the offending stage.

When the receiver cuts out, the offending stage will be indicated by the channel analyzer. Following this, a careful analysis of the faulty stage will uncover the defective part, permitting repairs to be made by replacing the part.

After the repair has been made, the receiver should be placed in operation and its performance observed over a period of time to note whether or not the trouble recurs.

Procedure:

1. Connect the proper channels of a signal tracer into the r-f, oscillator, i-f, and a-f sections of the receiver.

2. Turn on the receiver and signal tracer, and allow them to warm up.

3. Set controls of signal tracer so that the eye tube of each section just closes.

4. Observe the eye tube of the signal tracer which opens when the intermittent occurs; this indicates the stage in which the trouble exists.

5. Make a careful resistance, voltage, and visual analysis of the offending stage to locate faulty parts.

6. Repair or replace faulty parts.

7. Re-check the performance of the receiver with the signal tracing equipment to determine whether or not the intermittent condition has been fully corrected.

F. Noisy Operation

General Information:

A receiver is said to be "noisy" when crackling sounds are produced in the loudspeaker. The cause of the noise may be isolated in most cases by a stage elimination test. In performing these tests for the cause of noise, it is wise to classify the noise as one of the following types:

(1) Noise that is noticeable only when a signal is received.
(2) Noise that is present with or without a signal being received.
(3) Noise that occurs only when receiver is vibrated, shaken or bumped.
(4) Noise occurring only when controls are manipulated.
(5) Noise from a source outside the receiver, such as static, or faulty electrical appliances.

The last named of these types is usually beyond the scope of the repairman, since troubles occurring within the receiver are the ones with which he is primarily concerned.

Procedure:

1. Connect the receiver to the proper source of power and turn on.

2. Ascertain whether the noise is present (a) only when a signal is tuned in, or (b) whether a signal is tuned in or not.

A. Noise which occurs only when a signal is tuned in.

3. Connect a test oscillator to the input of the radio to supply a strong unmodulated r-f signal.

4. Tune the radio to the frequency of the test oscillator.

5. Tap each tube envelope sharply with the finger and notice if the noise is due to a bad tube. If the noise is increased when a particular tube is tapped, that tube should be replaced.

6. Signal trace the radio from the input toward the output, using headphones in the signal tracer output. At the point where the noise appears, the defective stage is indicated as that stage just preceding the point of test.

7. Check the components of the stage located in Step 6 for resistance conditions.

Note: Radio frequency and intermediate frequency transformer primaries becoming defective due to electrolysis are chiefly responsible for noise which occurs only when a signal is tuned in.

B. Noise which occurs at all times regardless of signal.

3. Temporarily ground the control grid of the output audio amplifier. This is a form of "stage elimination". If the noise disappears when the grid is grounded, the noise is not located in the output stage. If the noise continues, its cause is in this stage; and a voltage and resistance analysis is performed to locate the defective part.

4. Temporarily ground the control grid of each stage of the radio successively from the output toward the input. Locate the point where the noise continues when the grid is grounded. The defective stage will be the one toward the output from the point of test.

5. Check the resistance of the circuit components of the defective stage to locate faulty parts (the chief items causing this type of trouble are defective resistors, transformer windings, capacitors, ground connections and corrosion of switch and socket contacts).

6. Repair or replace defective items.

7. Check the operation of the receiver to make sure that the noise condition has been corrected.

G. Oscillation

General Information:

Oscillation is a condition of excessive feedback either in one stage, or between two or more stages of amplification in a receiver. The presence of oscillation will be indicated by:

(1) A steady audio-frequency note in the background of the signal being received.
(2) A chirping sound in the loudspeaker over all or a part of the tuning range of the receiver.
(3) A "putt-putt" sound, commonly called "motorboating", in the loudspeaker, over all or a part of the tuning range of the receiver.
(4) A whistle or howl when a signal is tuned in on the receiver.

The source of oscillation in the r-f and i-f sections of a receiver may be located by placing the fingers of one hand between ground and the control grids of each of the tubes in turn, starting at the antenna circuit. The stage in which this causes the oscillation to disappear is almost always the stage in which the oscillation is being produced.

Analysis of the receiver by signal tracing will also locate the stage in which the oscillation is being produced. Headphones should be used in the output of the signal tracer to indicate when the oscillating stage is reached.

The most common causes of oscillation are:

(1) Defective tube.
(2) Incorrect alignment.
(3) Open filter capacitor.
(4) Open by-pass capacitor.
(5) Poor ground on tuning.
(6) Plate or screen voltages too high.
(7) Poor solder connection.
(8) Suppressor grid open in pentode type tube.
(9) Tube or coil shields not properly grounded.
(10) Inductive or capacitive coupling between stages due to improper lead dress.

Procedure:

1. Place receiver in operation.

2. Place the fingers of one hand between the chassis and the control grid of each of the tubes in turn, starting with the r-f amplifier and proceeding toward the audio output tubes. The stage which when touched causes oscillation to disappear is usually the stage in which the oscillation is being produced.

   Note: Moistening the fingers to provide better (lower resistance) contact is generally advisable, especially in the audio-amplifier stages. If this test does not locate the stage proceed with Step 3.

3. Use the signal tracing equipment as in Job 15 to locate the oscillating stage. (Note: Use the headphones as an indicator.) The stage preceding (on the input side of) the point at which oscillation is determined is usually the faulty stage.

4. Perform a resistance and voltage analysis, and check the lead dress and shielding of the stage responsible.

5. Correct such faulty conditions as may be causing the oscillation.

6. Operate the receiver to ascertain the absence of oscillation.

H. Weak Reception

General Information:

A weak receiver may be identified as one in which the overall amplification is less than the normal amount specified by the manufacturer. This is usually indicated by the absence of response from distant stations or those of low power output; i.e., only the strong local stations come through.

The most common causes of weak receivers are:

(1) Defective tubes - rating below normal.
(2) Improper voltage conditions.
(3) Incorrect alignment of the receiver circuits.
(4) Improper resistance conditions in the circuit.
(5) Incorrect coupling conditions between the various amplifier stages.
(6) Loss of voltage amplification due to circuit losses caused by defective insulation and moisture.

In locating the cause of weak reception, signal tracing equipment may be employed, noting in which stage normal amplification is not produced. An alternative method would be to use the V.T.V.M. to measure the voltage gain-per-stage. In either case it may be necessary to rely on comparison to average gain-per-stage values, as specific information is not generally available. The average gain-per-stage to be normally expected may be found in signal tracing manuals which accompany the equipment used.

Procedure:

1. Test the tubes in the receiver. Replace such tubes as may be found defective.

2. Place the receiver in operation.

3. Check the alignment of the r-f, mixer, and i-f stages, and adjust if necessary. If this does not remedy the condition, proceed with Step 4.

4. Check the d-c voltage output of the power supply and the voltage present at the tube socket terminals.

5. Correct circuit conditions to provide proper operating voltages.

6. Make a resistance analysis of the receiver to locate any high resistance contacts or defective parts.

7. Correct faulty conditions found in Step 6.

8. Make gain-per-stage checks with signal tracer as outlined in Job 15 (C) and (E) to verify the correct operation of each stage of the receiver.

9. Tune the receiver to a signal that is quite weak, and compare the output to the normal rated output for the receiver as a rough check on overall sensitivity.

QUESTIONS

Place the answers to these questions in your notebook or on form as directed by instructor.

Part I For each of the conditions listed below explain: (a) What test should be made in a superheterodyne receiver to localize the stage in which the source of trouble is located; (b) What test should be made to determine the defective part in the stage located in the above step.

1. Receiver whistles on stations over the entire tuning range.
2. Receiver is tuned to a station; the volume of sound coming out of the loudspeaker suddenly decreases to about half its original output.
3. Receiver does not operate below 700 kc.
4. Receiver is noisy when receiving a strong local signal and is not noisy when no signal is tuned in.
5. Receiver hums loudly when no signal is being received.
6. Receiver continues to operate when volume control is fully retarded.
7. Receiver operates weakly on all stations.
8. Receiver is noisy when turned on and no signal is received.
9. Receiver does not operate. All tubes and voltages test normal.
10. Receiver gives distorted reception on strong stations but not on weak ones.
11. Receiver gives distorted reception on all stations.
12. Receiver has a high pitched whistle at all times (with and without a signal coming through).
13. A noise is heard from the output transformer when a station is tuned in, but none is heard from the speaker.
14. Stations interfere with each other, making it impossible to obtain the desired station clearly.
15. Receiver has intermittent distortion on all stations.
16. Receiver is noisy when dial is turned.
17. Stations are received on two positions of the range switch but not on the third
18. Noise is heard when the receiver is jarred.

References:

The Radio Amateur's Handbook (Any Edition), A. R. R. L., Chapter on "Tuning and Adjusting Receivers".
The Radio Handbook (Any Edition), Editors and Engineers, Chapter on "Radio Receiver Theory".

TABULATION FORM 1 (Copy to required size in notebook)

(1) Receiver: (Serial No.)
(2) Symptoms Observed: 1. (List all symptoms observed)
(3) Method of Analysis: 1. (List methods used to localize the source of trouble to a particular stage)
(4) Location of Trouble: (List the stage or stages)
(5) Circuit Analysis by: (Method used to locate faulty parts)
(6) Repairs Made: (List repairs made to correct the troubles) 1. 2. 3.

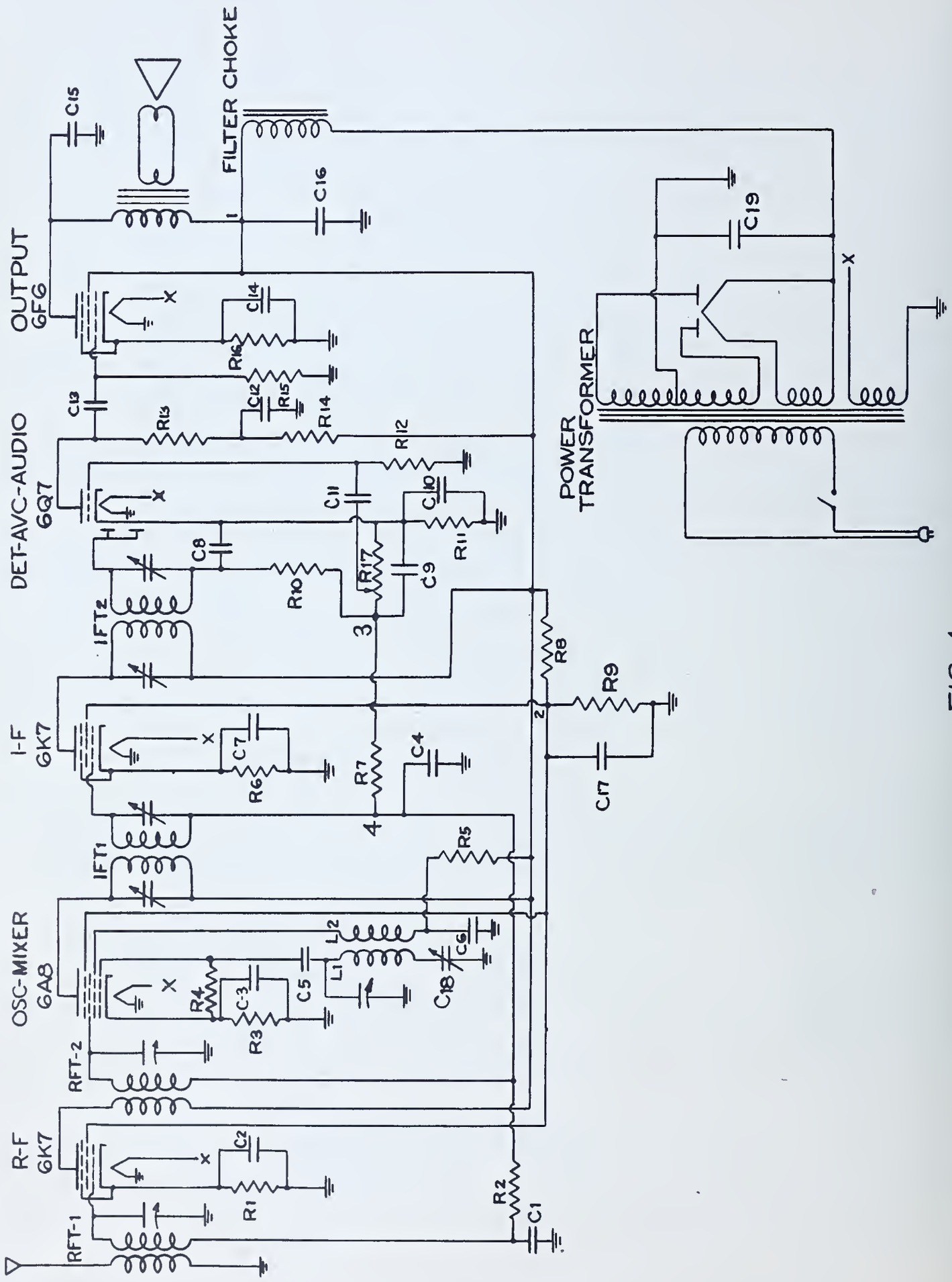
OUTPUT
6F6
DET-AVC-AUDIO
6Q7
I-F
6K7
OSC-MIXER
6A8
R-F
6K7
FILTER CHOKE
POWER
TRANSFORMER
RFT-1
RFT-2
IFT1
IFT2
C15
C16
C19
C14
C13
C12
C11
C10
C8
C9
C7
C6
C5
C4
C3
C2
C1
C17
C18
R16
R15
R14
R13
R12
R11
R10
R9
R8
R7
R6
R5
R4
R3
R2
R1
L1
L2
1
2
3
4
X

FIG.-1

Part II Each of the items below lists a circuit failure in the superheterodyne receiver shown in Fig. 1. For each circuit failure state: (a) The symptom of trouble that will be indicated by the operation of the receiver. (b) The method of analysis and tests necessary to locate the trouble in the shortest possible time.

1. C_1 is shorted.
2. R_2 is shorted.
3. R_1 is open.
4. Lead from RFT_1 secondary to grid of 6K7 tube has a high resistance solder connection.
5. C_{17} is open.
6. C_{17} is shorted.
7. R_9 is open.
8. Short between cathode and heater of 6K7 r-f tube.
9. Shorted turns in primary winding of RFT_2.
10. Connection from cathode to suppressor grid of 6K7 r-f tube open.
11. Intermittent short in trimmer capacitor on tuning capacitor connected to control grid of 6A8 mixer tube.
12. Resistance of R_4 very low.
13. Shorted turns in L_1.
14. Connections from L_2 to plate of 6A8 oscillator tube and R_5 reversed.
15. Loose elements in 6A8 mixer tube.
16. C_4 open.
17. C_4 leaky.
18. Shield of IFT_1 not grounded.
19. Trimmer capacitor across IFT_2 primary shorted.
20. C_8 open.
21. C_9 open.
22. C_9 wrong value - too high capacity.
23. R_8 shorted.
24. C_{10} leaky.
25. C_{10} open.
26. C_{11} shorted.
27. R_{11} open.
28. R_{13} shorted.
29. C_{13} shorted.
30. C_{14} wrong value - very low capacity.
31. R_{15} open.
32. C_{14} leaky.
33. R_{16} wrong value - high resistance.
34. C_8 shorted.
35. C_{15} open.
36. R_9 open.
37. Connections from primary winding of IFT_2 to plate of 6K7 i-f tube and B+ reversed
38. 6F6 tube gassy.
39. C_{16} open.
40. C_{16} low capacity.
41. C_{19} low capacity.
42. R_{12} open.
43. No tension on contact arm of R_{17}.
44. C_6 open.
45. C_5 shorted.
46. C_{18} wrong value - low capacity.